Int. J. Engng Ed. Vol. 17, No. 3, pp. 267–275, 2001
Printed in Great Britain.

0949-149X/91 $3.00+0.00

An Integration of Simple Materials and Complex Ideas: Description of an Instructional Sequence in Statics*

JOSEPH A. TAYLOR, THOMAS M. DANA and MEHMET F. TASAR
The Pennsylvania State University, 167 Chambers Building, University Park, PA 16802, USA.
E-mail: jat178@psu.edu

A collaborative effort between Penn State's College of Engineering and College of Education resulted in the development of an engineering course designed primarily for future elementary school teachers that focuses on the construction of robust conceptual understanding of basic science and engineering ideas. In this article we describe an instructional approach we designed utilizing Lego^{TM} and other simple materials to assist non-engineering students in developing an understanding of the basic concepts of normal forces, tension, compression, equilibrium, and vector components in the context of simple trusses.

INTRODUCTION

THERE IS an adage that states that the outcomes of teaching practice cannot be equated with learning; just because we teach a concept it does not mean students will learn it the way we intend. When future teachers are the students, we think it is especially important for learning with understanding to occur, as it is those future teachers who will provide future engineers with basic educational opportunities in science. At Penn State, University Park, a collaborative effort between the College of Engineering and College of Education under partial support from the NSF-funded program ECSEL (Engineering Coalition of Schools for Excellence in Education and Leadership—http://www.ecsel.psu.edu/ecsel/ has attempted to find meaningful ways to connect engineering with school-based science in kindergarten through grade 12. Our participation in ECSEL has resulted in the development of an introductory, non-majors course for future primary school teachers that focuses on the development of conceptual understanding of certain physical science and engineering ideas [1].

THE NATURE OF THE COLLABORATION

Several faculty members and graduate students from both colleges constituted the planning and design staff of the course. Rather than relying on a standard science and/or engineering textbook, we agreed to develop the course curriculum and materials ourselves, since existing curricular resources were not fully compatible with our instructional goals. The planning and design staff met in several sessions prior to beginning the delivery of the course to determine the instructional philosophy and methods, as well as planning and creating an authentic curriculum. The collaborative development of course curriculum and materials continues to date.

Since the course's inception, the primary instructor has been a Science Education doctoral student. The two collaborating colleges have shared the expense of providing a half-time graduate assistantship for this person and for the purchase of equipment and materials. Due to the inter-disciplinary nature of the course curriculum, the supervision and participation of one faculty member from each college has been helpful in producing a high quality course.

A TYPICAL STUDENT PROFILE

Typical science requirements for prospective primary teachers at Penn State include three courses in the natural sciences. The three courses are usually introductory courses for non-science majors representing the biological, physical, and earth or space sciences. These teachers, who might teach nearly 900 primary grade children in their careers, receive no formal coursework or laboratory experiences in the applied sciences nor are they aware of many of the career options in applied fields such as engineering. The course described in this article is one of the revamped science courses at Penn State—University Park that prospective primary teachers can select to fulfill their physical science requirement.

---

* Accepted 15 September 2000.

COURSE GOALS AND INSTRUCTIONAL FORMAT

The course is designed to engage 25 students (per section) in an instructional format that integrates laboratory and lecture into a highly interactive, problem-based, curriculum. The instructional format is based upon several exemplary models [2, 3]. This 3-credit course meets in two 2-hour blocks each week throughout a 16-week semester.

The course is intended to help students learn basic physical science concepts from the point of view of an engineer. Hence, engineering and science perspectives are integrated. Students engage in a series of small-group projects that encourage them to solve engineering design problems under simulated real-world constraints. By assuming the roles of an engineer, the students obtain authentic problem-solving experiences including brainstorming with peers, building and simulating computer models, implementing and testing prototypes, and presenting their design solutions to an audience. The open-ended nature of the engineering problems encourages creative thinking and facilitates the development of students' conceptual understanding as well as scientific inquiry skills such as experimental design, data collection/analysis, and the effective communication of findings.

PEDAGOGICAL FOUNDATIONS

There is evidence that students' difficulties in learning science are due in part to the way science is typically taught [4]. Many educators and researchers have responded to claims such as these by doing extensive work developing and implementing conceptual change strategies [5–8]. From their work and the work of others, the *Conceptual Change Model* emerged [9]. The Conceptual Change Model utilizes a learning environment where students are encouraged to become aware of their preconceptions, confront their preconceptions and work to resolve conflicts between their preconceptions and their observations. Research into the conditions necessary for conceptual change has indicated that a new conception must have explanatory and predictive power in order to be attractive to students [5, 10]. The *Conceptual Change Model* also suggests that for lasting conceptual change to occur, the students must have the opportunity to *extend* their developing concepts. This involves applying a concept to other situations (in the classroom and in everyday life) [9].

The course also builds on recommendations of the US National Science Foundation's (1996) report, *Shaping the Future* [11]. Among its recommendations for the improvement of undergraduate science education, the report claims that it is time for science, mathematics, engineering, and technology faculty to implement instructional innovations that emphasize problem-based learning and de-emphasize lecturing in order to 'make a difference' in undergraduate education. Consequently, we developed an engineering course for non-science and non-engineering majors called *Fundamentals of Science and Engineering Design* whose pedagogical approaches utilize contemporary research findings on learning and teaching to inform our pedagogical approaches (see http://www.ed.psu.edu/ci/scied/scied497f/). In its current form, the course features three 5-week modules: Structures, Simple Machines, and Basic Electricity. The following section describes a unique instructional sequence in statics that was developed in the context of the Structures Module.

INNOVATION IN ACTION: AN INSTRUCTIONAL SEQUENCE IN STATICS

Throughout the pilot year of this course, it became clear to us that concepts such as normal forces, tension, compression, equilibrium, and vector components were difficult for many of our elementary education majors (most of whom have little science background) to comprehend. Consequently, we developed an instructional sequence consistent with the *Conceptual Change Model* that builds on their intuitive understanding of these concepts and allows them to develop a more scientifically appropriate understanding. In particular the instructional sequence was designed as a practical, hands-on approach to help students develop qualitative and quantitative understanding of these concepts and apply these concepts to solve problems involving the Method of Joints [12].

Since the instructional sequence was intended to serve as an introduction to truss analysis, we will limit our examples to that of basic trusses under a symmetrical load. Each phase described below utilized simple, everyday materials and can be modified easily to serve as a lecture demonstration or as a hands-on laboratory experience for use with groups of two or three students.

Phase 1: Normal forces and abutments

In this activity, students explore how the Normal forces supporting a single beam bridge are distributed. A single Lego^{TM} beam straddles two digital balances (see Fig. 1). As the load is moved to various locations on the beam, the normal force provided by each of the balances (i.e., bridge abutments) can be observed on the digital display of the balance.

Typically, we have used this activity as a lecture demonstration where the students have made predictions as to the reading of the digital balances when the load is placed at various locations on the beam. Since our overall objective was to analyze trusses that were loaded symmetrically (near the geometric center of the beam), we focused mainly on our students' predictions when the load was

Fig. 1. Our apparatus for demonstrating the normal force of a bridge abutment.

hung at this location. We found that a large number of students predicted that the reading *on each balance* would be equal to the weight of the load. Although it may seem somewhat intuitive, we caution you not to assume that all or even most of the students will correctly predict the readings on the balances.

Phase 2: Tension and compression

Initially, some of our students' had difficulty determining the type of force pair (tensile or compressive) present in the beams of a loaded, static truss. We identified a source of this conceptual problem by closely examining our students' responses. Although our students quickly came to understand that two inward pushing forces would place a beam in compression and two outward pulling forces would place a beam in tension, the students had trouble picturing an inanimate object (like a wall or a joint) providing one or more of these forces. We encountered problems when we used Newton's Third Law to explain such phenomena. Since many of our non-majors had little or no experience with Newton's Third Law, they were noticeably confused when examining force diagrams. The students often assumed that both forces of an action-reaction pair were acting on the *same* object [13].

The activity we devised is a product of our search for a conceptual approach to this problem. To make the presence of tension or compression observable, we constructed two truss models using Lego$^{\text{TM}}$ pieces. In each model, a string replaced one of the six beams (see Figs 2a and 2b). We chose to use string because it behaves in very observable ways when under tension or compression ('taut' or 'slack' respectively).

We asked the students to predict whether the string would become taut or slackened after a symmetrical load was applied to each model. Some students were able to correctly predict this by visualizing what the joints at each end of the beam would do when the load was applied. If the joints would come together, that would create compression. If the joints would move apart, tension would be created. Students typically indicated that they were unsure of the type of force that the string would experience until *after* we applied the load. As a follow-up activity, we asked our students to construct several other trusses of their own design. Each beam of the truss was to be labeled with the type of force that it would experience under a symmetrical load. Using string in place of the beam in question, all of the students demonstrated their ability to identify the type of force pair present in each beam of their trusses.

Phase 3: The force exerted by a beam on a joint

To illustrate the effect that a beam in compression or tension has on a joint, we asked our students to choose one of their hands to represent a joint. We reminded the students that this joint was to be stationary at all times. We asked the students to use both hands to place the beam under compression or tension. Finally, we asked the students to concentrate on the feeling that they get in the 'joint hand' when the beam is in compression or tension. The purpose of this exercise was to help the students visualize that beams in

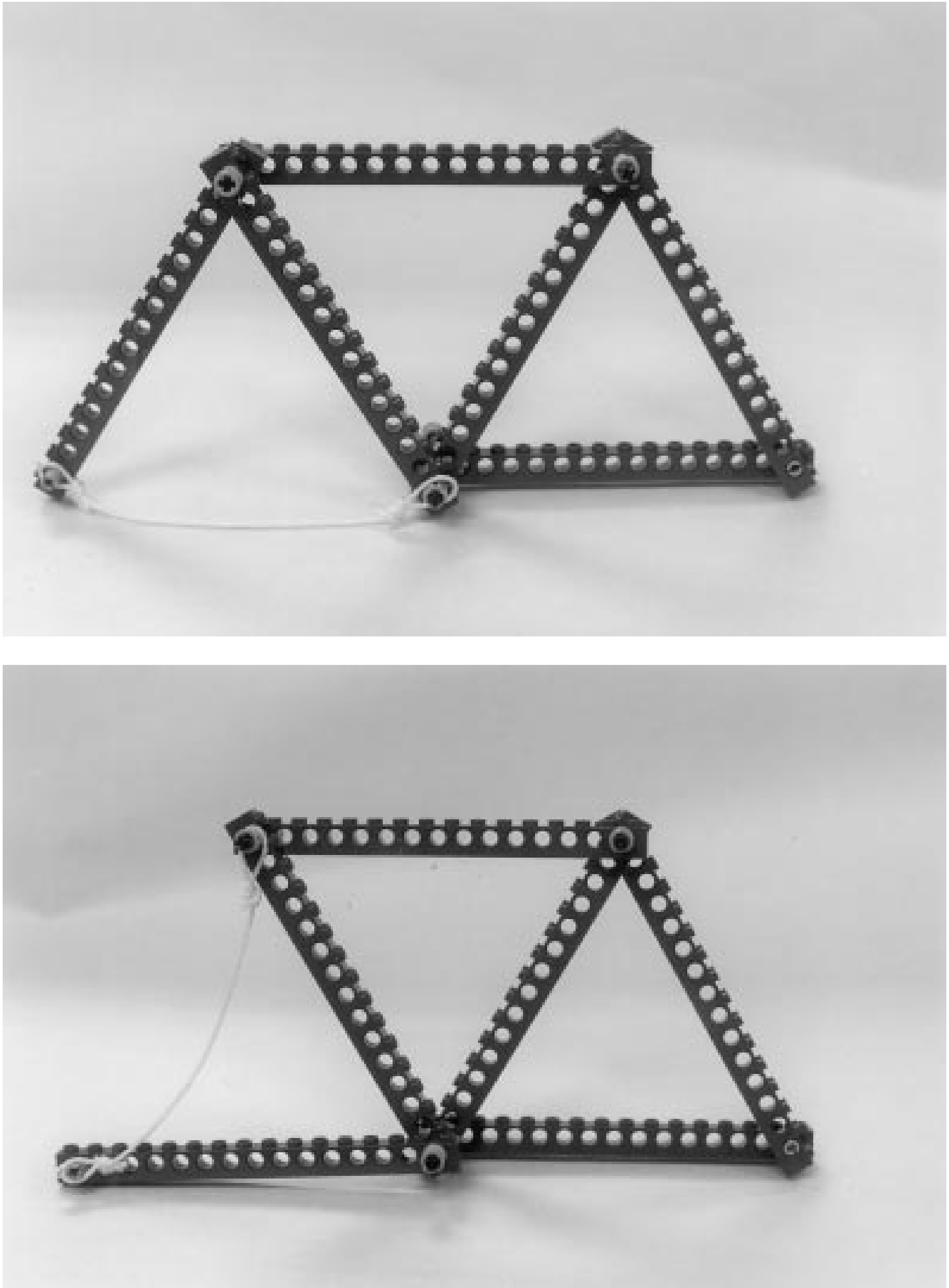

Figs 2a and 2b. Simple truss model s constructed of string and Lego^{TM} pieces.

compression push on joints while beams in tension pull on joints.

Phase 4: Equilibrium and vector components

This activity can be done most conveniently using a commercial force table. However, in keeping with our intention of using simple and everyday materials to teach concepts, the activity can be done with a round or rectangular tabletop, movable clamping pulleys, mass hooks, slotted masses, string, and a protractor (see Figs 3a and 3b for our apparatus). In our teaching laboratory we are fortunate to have Sheldon Laboratory System's Bi-Level Student Science Center^{TM} (see Fig. 3a). This table system has a 360° protractor printed directly on the table laminate. We took advantage of this unique system in the design of this laboratory/demonstration. These portable

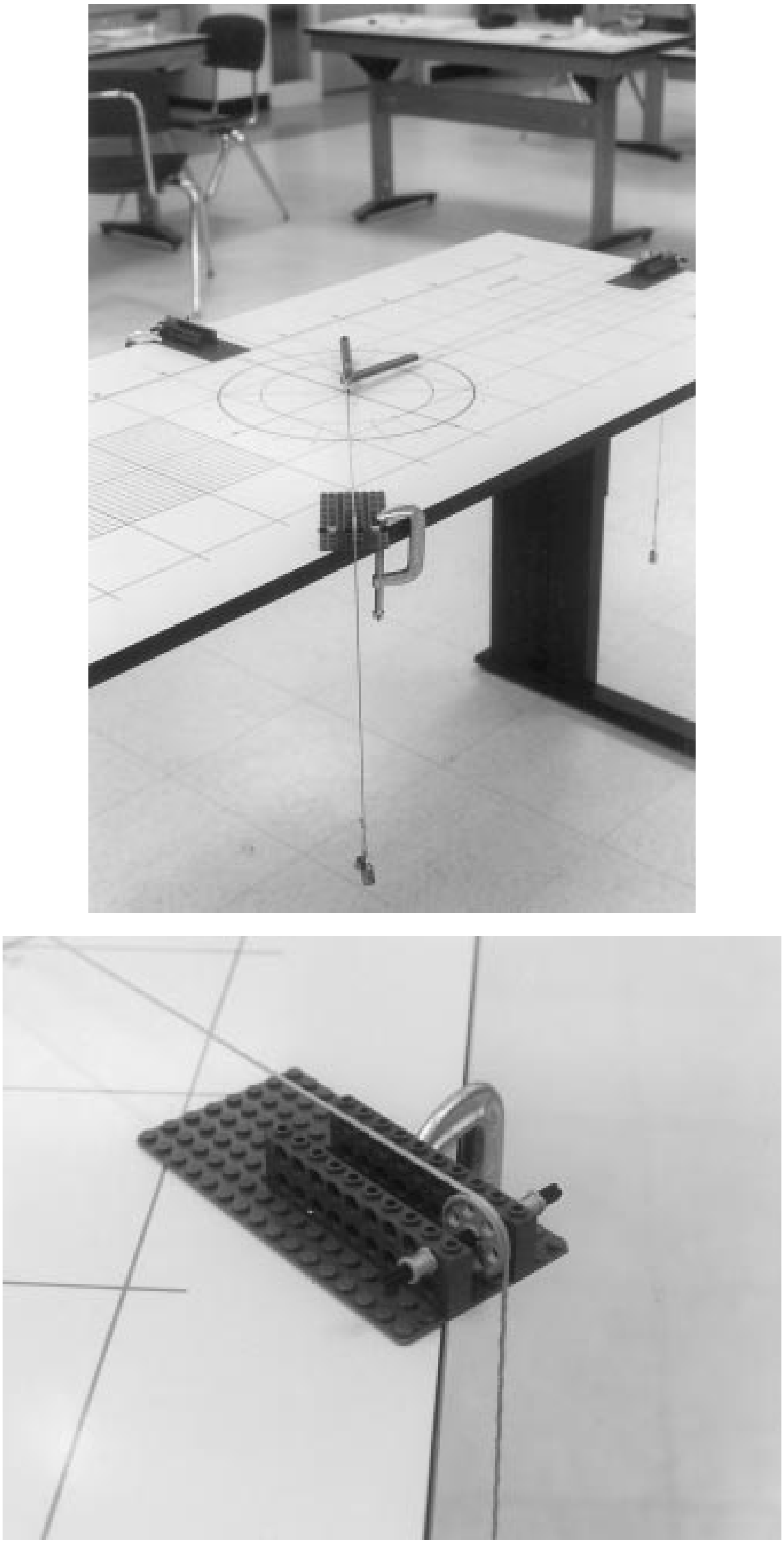

Fig. 3. (a) Our version of a force table. (b) A close up of the movable pulleys' construction.

student tables conprise our entire laboratory and are easily arranged in groups of two or more for large group disussions or separated for laboratory work.

Initially, we asked students to determine the forces necessary to 'balance' the 4-beam joint without moving the pulleys (see Fig. 4). The students moved through this phase of the activity rather quickly and successfully. It is important to note that some of our students initially concluded that it was *necessary* for all four forces to be of the same magnitude to balance the joint. Only after we questioned them about their conclusion did they recognize that only two pair of equal and opposite forces was required to satisfy the condition for a 'balanced' joint ($\mathbf{A} = \mathbf{B}, \mathbf{C} = \mathbf{D}$ in Fig. 4). It was at this point that we introduced the term 'equilibrium.'

In the second phase of this activity, our goal was to have students investigate the relationships between the forces that might act on the corner joint of a truss. We asked our students to place the two-beam corner joint on the apparatus and, without changing the *direction* of the forces, bring the joint into equilibrium (see Figs 5a and 5b).

The majority of students found that, regardless of the magnitudes of **N** and **T**, **C** is necessarily larger in magnitude than **N** or **T**. In addition, many students observed that if the magnitude of **C** was decreased, the joint would move up *and* to the right. We capitalized on this conclusion to stimulate the students' thinking about the role that the force **C** played in keeping the joint in equilibrium. We helped students to recognize that force **C** was pulling down *and* to the left. In the next phase of the activity, we asked the students to bring the joint into equilibrium (keeping **N** and **T** unchanged) using two forces *instead* of just **C**. The students quickly realized that creating two perpendicular forces would work: one force equal and opposite to **N** and one equal and opposite to **T** (see Figs 6a and 6b).

We were certain to emphasize that these two forces acting together performed the same 'task' as force **C** did acting alone. Therefore, the original force **C** could be replaced by these two forces if necessary. At this point we introduced the term 'vector components.' Later in the course, a number of students identified this experience as being crucial to the development of their concept of vector components.

In the final phase of the activity, we asked the students to investigate the relationship(s) between the magnitude of **C** and the magnitude of its components $\mathbf{C_x}$ and $\mathbf{C_y}$. Some of the groups did form the ratio $\mathbf{C/C_x}$ and $\mathbf{C/C_y}$. Across these groups, the value of the ratios ranged from 1.3 to 1.5. With some guidance the students were able to connect this result to what they had learned about the properties of a 45°/45°/90° triangle. We showed the students how $\mathbf{C}$, $\mathbf{C_x}$, and $\mathbf{C_y}$ could be combined to form a 45°/45°/90° triangle. Once we provided this hint, many of the students remembered that (theoretically):

$$\mathbf{C/C_x = C/C_y = \sqrt{2} = 1.414}\ \ldots$$

Consequently, the students who determined the values of $\mathbf{C/C_x}$ and $\mathbf{C/C_y}$ in the laboratory activity found their results to be reasonable.

When we finally introduced the Method of Joints, we were very pleased to see students apply concepts developed over the course of the module.

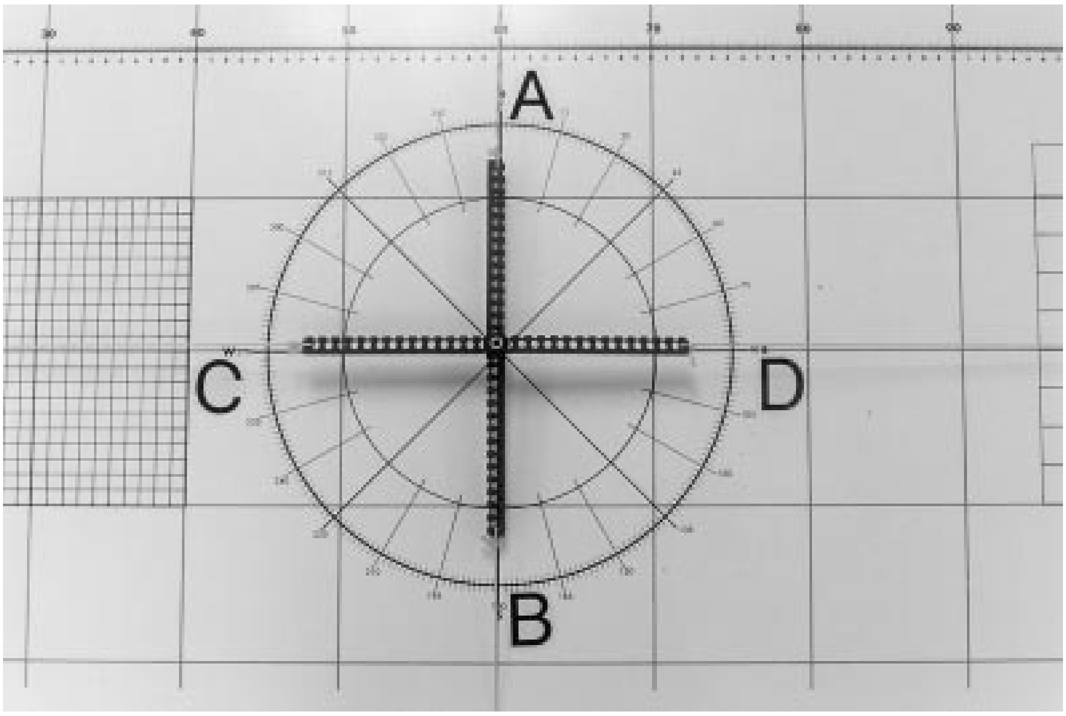

Fig. 4. Our apparatus for demonstrating equilibrium in a four-beam joint.

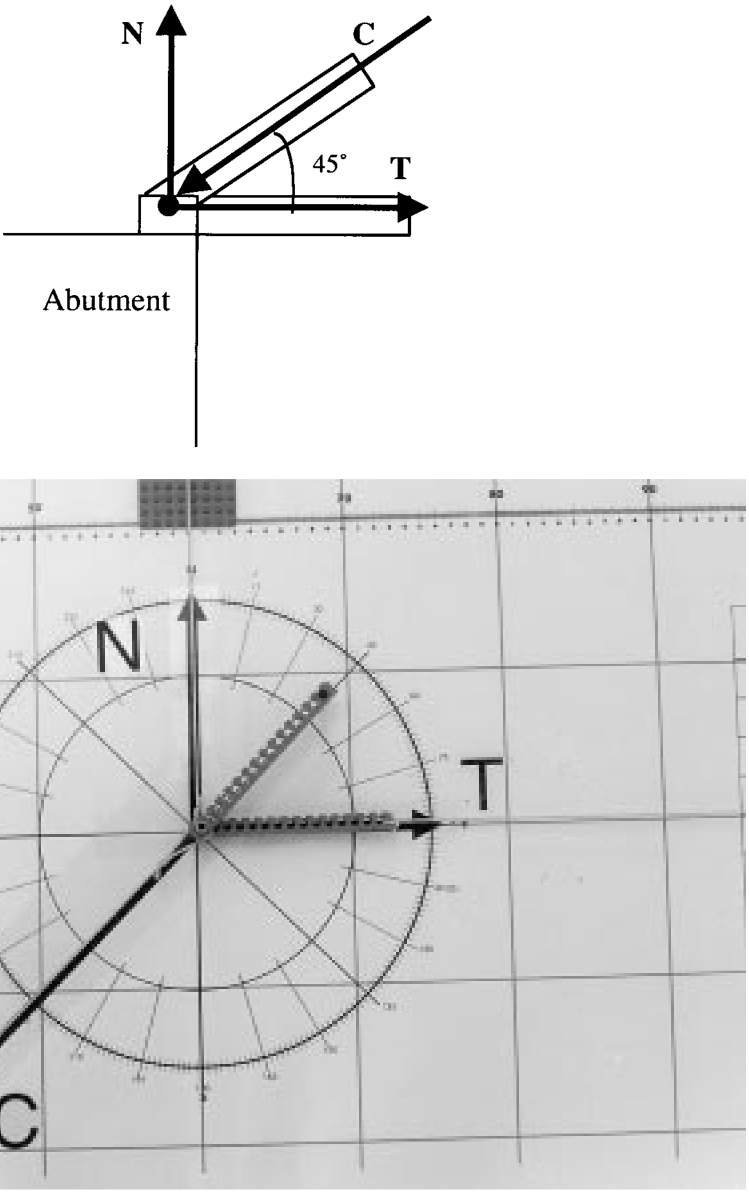

Fig. 5. (a) A free body diagram of the forces acting on the corner joint of a simple truss (C = the compressive force exerted by the diagonal beam, N = the normal force exerted by the abutment, and T = the tensile force exerted by the horizontal beam). (b) The experimental representation of the free body diagram in Figure 5a.

The example problems that we guided the students through went so smoothly that we decided that providing two examples was sufficient. On the *Structures* module exam, the students were able to use the Method of Joints handily to determine the type and magnitude of the force pair (tension or compression) present in each beam of a symmetrically loaded truss. With only a few exceptions, the students worked through this problem quickly and successfully.

HINTS FOR IMPLEMENTATION

A typical class session began with a brief discussion of important ideas from previous sessions and an introduction to the essential concepts and terminology to be completed in that session. When a laboratory was completed, the students were encouraged to explore with their partners the important concepts of the laboratory. This was followed by a large-group, instructor-led synthesis of these ideas. Each session culminated with an assignment. The instructors designed the assignments such that the students would be required to apply the important concepts of each session in a novel context.

The instructional time required for each phase of this sequence depended upon whether a demonstration or laboratory format was used. Over the past four semesters, the phases were piloted in both formats. When conducted in a laboratory format,

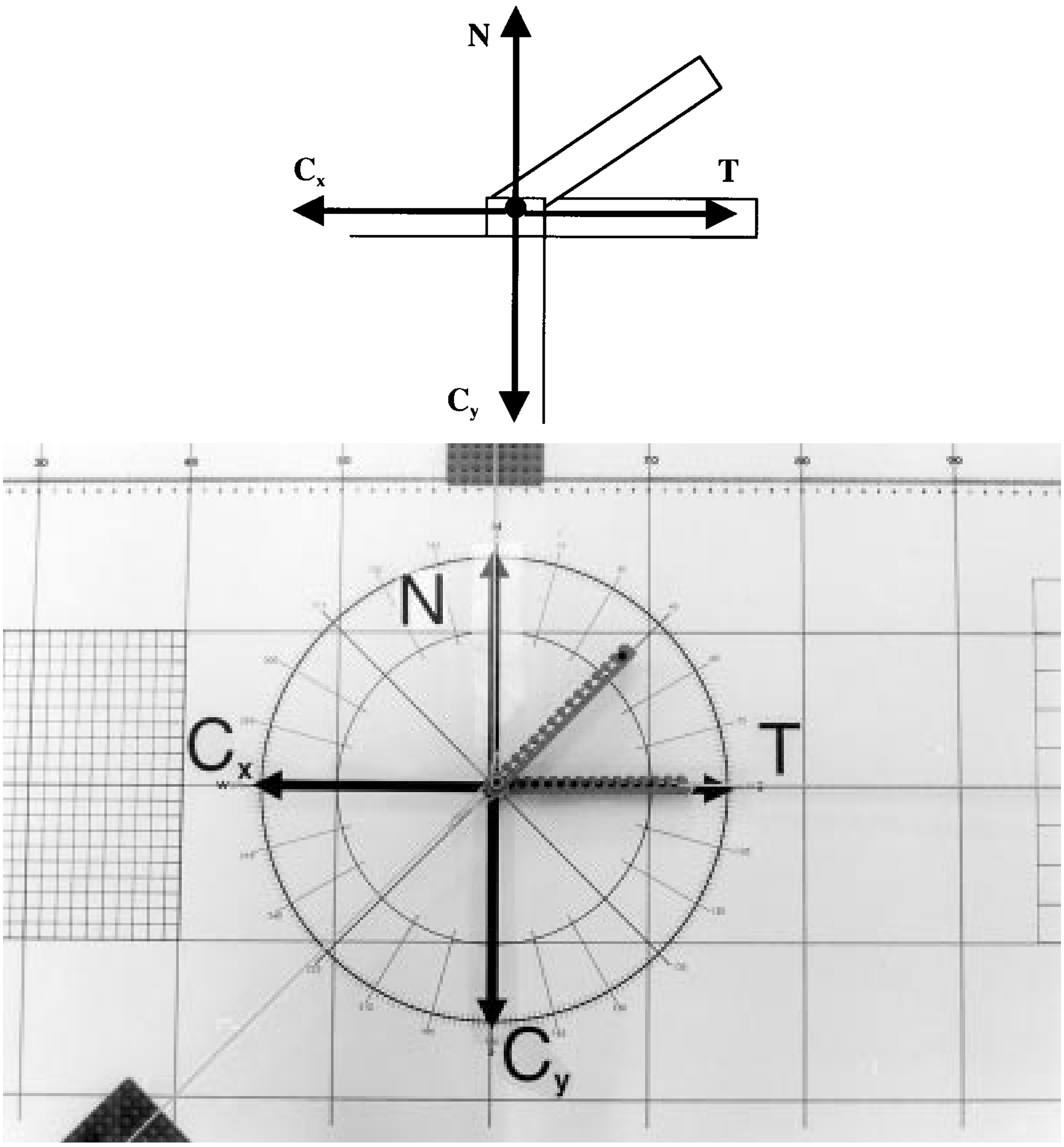

Fig. 6. (a) A free body diagram of the forces acting on the corner joint of a simple truss. (C_x, C_y = the perpendicular components of the compressive force exerted by the diagonal beam, N = the normal force exerted by the abutment, and T = the tensile force exerted by the horizontal beam). (b) The experimental representation of the free body diagram in Figure 6a.

each of phases one and three were completed and discussed in 15–25 minutes. Phases two and four required 30–60 minutes (including discussion) when used in a laboratory format.

REACTION TO THE INSTRUCTIONAL SEQUENCE: THE STUDENT PERSPECTIVE

We continue to be pleased by the positive impact that our students' success with the Method of Joints has had on their self-concept as learners of science and engineering principles. In interviews done with these non-majors at the end of the semester, over half of the students provided unsolicited feedback that indicated how proud they were of the fact that they could now do a '*real engineering problem*.' One such comment is provided below as an exemplar:

> My roommate is an engineering major. He couldn't believe that I was easily analyzing these complex trusses. At first, he just wanted to show me how he would do the problem. By the time we were done talking, he asked me to show him my way [of doing the analysis]. It really made me feel proud of what I had learned.

In addition, some students mentioned in anecdotes that their friends and family members, some of whom are engineers or engineering majors, were extremely impressed with the knowledge and skills that they had developed.

SUMMARY

The primary purpose of this paper was to introduce an instructional sequence that made the Method of Joints and related concepts more intuitive to non-engineering majors in our course. This instructional sequence was designed to help students develop a conceptual understanding of normal forces, tension and compression, the forces exerted by beams on joints, equilibrium, and vector components. In order to overcome the conceptual difficulties in statics that even engineering majors might experience, we recommend this instructional sequence or an adaptation thereof for use with engineering and engineering technology students.

REFERENCES

1. J. A. Taylor, V. N. Lunetta, T. M. Dana and M. F. Tasar, Bridging science and engineering: an integrated course for non-science majors, A paper presented at the summer meeting of the American Association of Physics Teachers (AAPT), San Antonio, TX, August 1999.
2. P. W. Laws, Calculus-based physics without lectures, *Physics Today*, **44**, 12 (1991) pp. 24–31
3. L. C. McDermott, Combined physics course for future elementary and secondary school teachers, *American Journal of Physics*, **42**, 8 (1974) pp. 668–676.
4. S. Tobias, *They're Not Dumb, They're Different: Stalking the Second Tier*, Research Corporation, Tucson, AZ 1990.
5. G. Posner, K. Strike, P. Hewson and W. Gertzog, Accommodation of a scientific conception: toward a theory of conceptual change, *Science Education*, **66**, (1982) pp. 211–227.
6. J. Clement, Overcoming student's misconceptions in physics: the role of anchoring intuitions and analogical validity, in J. Novak (ed.), *Proc. Second Int. Sem. Misconceptions and Educational Strategies in Science and Mathematics* (Vol. 1), Cornell University, Ithaca, NY 1987.
7. R. Driver and E. Scanlon, Conceptual change in science, *J. Computer Assisted Learning*, **5**, pp. 25–36 (1989).
8. R. Duit, Research on students' alternative frameworks in science—topics, theoretical frameworks, consequences for science teaching, in J. Novak (ed.), *Proc. Second Int. Sem. Misconceptions and Educational Strategies in Science and Mathematics*, (Vol. 1), Cornell University, Ithaca, NY 1987.
9. J. Stepans, *Targeting Students Science Misconceptions*, Idea Factory, Riverview, FL (1996).
10. K. Strike and G. Posner, A conceptual change view of learning and understanding, in L. West and A. Pines (eds.), *Cognitive Structure and Conceptual Change*, Academic Press, Orlando, FL (1985).
11. National Science Foundation, *Shaping the future: new expectations for undergraduate education in science, mathematics, engineering and technology*, (NSF 96–139), National Science Foundation, Arlington, VA 1996.
12. J. L. Meriam and L. G. Kraige, *Engineering Mechanics Volume 1: Statics*, Wiley, New York, 1986.
13. M. F. Tasar, J. A. Taylor and T. M. Dana, Engineering with Legos$^{\mathrm{TM}}$. A paper presented at the summer meeting of the American Association of Physics Teachers (AAPT), San Antonio, TX, August 1999.

Joseph A. Taylor received his bachelor's degree in physics education from California University of Pennsylvania and his master's degree in mathematics education from Ohio University. He taught high school physics and mathematics before entering his current doctoral program in science education at The Pennsylvania State University. Joe has been teaching the course: Fundamentals of Science, Technology, and Engineering Design since the fall semester of 1998.

Thomas M. Dana is Henry J. Hermanowicz Professor of Teacher Education at Penn State, University Park. He taught middle and high school science in New York and Florida before earning his Ph.D. from Florida State University. Dr Dana's research program focuses on science teacher learning and change, particularly in the context of teacher preparation programs. He is the former co-editor of the Science Teacher Education Section of the journal *Science Education.*

Mehmet F. Tasar received the BS degree from Bogazici University, Istanbul, Turkey, and the M.S. degree from Erciyes University, Kayseri, Turkey in physics. Currently, he is completing his Ph.D. studies in Curriculum and Instruction with emphasis in Science Education at Pennsylvania State University. Mehmet has assisted in the teaching as well as provided instructional support for the course Fundamentals of Science, Technology, and Engineering Design since the fall semester of 1998.