International Journal of Engineering Education Vol. 31, No. 6(A), pp. 1587–1604, 2015
Printed in Great Britain

0949-149X/91 $3.00+0.00
© 2015 TEMPUS Publications.

Patterns of Student Conceptual Understanding across Engineering Content Areas*

DEVLIN MONTFORT
School of Chemical, Biological and Environmental Engineering, Oregon State University, Corvallis, OR 97333, USA.
E-mail: devlin.montfort@oregonstate.edu

GEOFFREY L. HERMAN
Illinois Foundry for Innovation in Engineering Education, University of Illinois at Urbana-Champaign, Urbana, IL, 61822, USA.
E-mail: glherman@illinois.edu

SHANE BROWN
School of Civil and Construction Engineering, Oregon State University, Corvallis, OR, 97331, USA.
E-mail: shane.brown@oregonstate.edu

HOLLY M. MATUSOVICH
Department of Engineering Education, Virginia Tech, Blacksburg, VA 24060, USA.
E-mail: matushm@vt.edu

RUTH A. STREVELER
School of Engineering Education, Purdue University, West Lafayette, IN 47907, USA
E-mail: streveler@purdue.edu

OLUSOLA ADESOPE
Educational Psychology Program, College of Education at Washington State University, Pullman, WA 99163, USA.
E-mail: olusola.adesope@wsu.edu

Much of the existing research on engineering students' conceptual understanding focuses on identifying difficult concepts in specific courses and curricula. Although there are a great number of findings from which engineering educators may be able to draw, few are directly transferable from their original context and few inform instructors about how to improve learning. This paper seeks to fill the gap by investigating conceptual understanding across four engineering disciplines. Specifically, the present study seeks to answer the following overarching research question: What are the patterns in engineering students' conceptual understanding across four engineering content areas? We used an amplified secondary qualitative data analysis to examine over 250 interviews with engineering students that were initially conducted to understand students' conceptual understanding in different disciplines of engineering. The engineering topics represented in the data set included mechanics of materials, transportation engineering, fluid mechanics, and digital logic. Two themes emerged from our analysis that apply to students' understanding across four diverse content areas within engineering: (1) students inappropriately group dissimilar phenomena, processes, or features, and (2) students reason using simplified causal relationships. These themes lend themselves to suggestions for instructional practice across disciplines and for future research areas.

Keywords: conceptual change; conceptual understanding

1. Introduction

Effective instruction builds on students' existing knowledge [1], requiring educators to know students' understanding prior to instruction. As part of understanding, educators must know the errors, and their undergirding misconceptions, that impede future learning. Engineering educators and researchers have made significant progress in cataloging these errors and misconceptions in a variety of disciplines [2–4]. However, simply cataloging common misconceptions is insufficient. These catalogues become unwieldy, providing few direct insights into how to change instruction or curricula to address these misconceptions.

The ultimate purpose of our work is to improve undergraduate engineering education by developing the conceptual understanding of engineering graduates. Rather than thinking error-by-error or misconception-by-misconception, we must support faculty in identifying student errors and adopting appropriate instructional approaches by focusing on patterns in cognition that generate these common errors. Essentially, we need to move beyond the "what" of taxonomies of misconceptions and move into the "why" behind them. A set of patterns in students' thinking that transcend specific concepts or disciplines will inform strategies that address the causes of students' difficulties, potentially addressing multiple misconceptions or foster-

* Accepted 11 June 2015.

ing long-lasting changes in students' approaches to learning [5–6].

In this paper, we demonstrate the power and value of patterns in students' understanding of engineering topics and aim to motivate future research. To that end, the present study seeks to answer the following overarching research question: What are the patterns in engineering students' conceptual understanding across concepts from four engineering content areas? To identify these patterns, we performed a secondary analysis on data drawn from prior research on students' conceptual understanding of four distinct engineering topics: mechanics of materials, transportation engineering, fluid mechanics, and digital logic.

2. Background

Most existing research on engineering students' conceptual understanding (and misunderstanding) is tacitly organized according to courses and curricula. For example research tends to focus on specific, fundamental courses [4, 7–16], or an engineering discipline such as materials science [17], chemical engineering [18–19], mechanical engineering [20], or aerospace engineering [21]. Engineering education is not alone in this narrow focus as similar research on student understanding of the physical sciences also generally emphasizes concepts defined in terms of the courses and curricula involved [22–28].

One notable exception is Streveler, Litzinger, Miller, and Steif's [3] synthesis of the literature on concepts that have proven difficult for students in engineering more broadly. Streveler et al. [3] summarized "conceptual learning" in engineering and presented common patterns in student difficulties from three content areas of engineering: mechanics, thermal science, and direct current circuits. In all three content areas they found prominent and consistent difficulties in two areas of student understanding: (1) "basic quantities" and (2) "relationships among the basic quantities." In mechanics, for example, they found that students struggled to understand the basic quantity of "force," specifically how it is a quantified interaction between two bodies rather than a property of a single body or a new substance in itself. Students also struggled with the relationships between force, acceleration, and velocity, often reasoning that force was proportional to velocity rather than acceleration. Streveler et al.'s work added to the growing taxonomy of student difficulties, begun with the seminal work of Halloun and Hestenes in the context of physics [29–30]. As argued by Streveler et al., "A key question that remains largely unanswered is what makes some concepts so difficult to learn and some misconceptions so difficult to repair?" [3, p. 290]. Answering this broad question requires an understanding of student's conceptual knowledge across engineering content areas that is theoretically and empirically rigorous and focused on identifying broader patterns.

One challenge in answering this broad question is that theories and theoretical frameworks for conceptual understanding (alternatively called conceptual change) are contested or have limited scope (see the International Handbook of Research on Conceptual Change [31]). Some researchers focus on inferring cognitive processes and organizations, and ask questions such as whether students' knowledge is fragmented or theory-like or how students categorize or analogize concepts (e.g., [32]). For example, Chi focuses on the ontological structures that students use (or fail to use) to reason about and categorize concepts, explaining why some, but not all, concepts are difficult to learn. Other researchers emphasize social and interactional data (e.g., [33]), and ask questions such as whether out-of-context academic questions with their implicit assumptions are to blame for students' apparent misconceptions or how motivation and trust moderate changes in conceptual understanding [34]. For example, Säljö [35] focuses on how the adult-child power relationship moderates how young children reveal correct conceptions or misconceptions during clinical interviews. The underpinning theory of conceptual understanding forms how a study is designed and how its results are interpreted [36] further complicating the ability to look across research to answer broad questions. Consequently, to answer our question about patterns in conceptual change across four engineering content areas, we initially set theory aside to derive empirical knowledge that will be derived from actual interviews rather than from theory. Recognizing the importance of theory, we then situate the empirical findings within theories of conceptual change.

3. Methods

To address our research question, we have undertaken an amplified secondary data analysis [37–38]. In this type of analysis, data collected originally for other purposes are combined to identify "common and/or divergent themes across data sets" (37, p. 48). As a secondary data analysis, we recognize that each of these data sets has been analyzed and published previously. Findings reported in previous papers generally focused on incorrect aspects of students' understanding in terms of technical competency (e.g., the biggest stress in a beam is near the point load) and contributed to the ideas of taxonomies of difficulties in different courses. The purpose of our secondary analysis is to extend prior findings by increasing the overall sample by combining individual data sets and examining patterns across the data sets identifying the underlying patterns in student difficulties across contexts. Table 1 summarizes our data sets and lists prior publications.

For the present analysis, we compiled data from over 250 interviews with engineering students that were initially conducted to understand students' conceptual understanding in different sub-disciplines of engineering. The engineering content areas represented in the data set include mechanics of materials, transportation engineering, fluid mechanics, and digital logic. We intentionally selected data from four prior studies because of the similarities in data collection methods and because they span different and similar disciplines. For example, mechanics of materials and fluid mechanics are content areas that are commonly covered across multiple disciplines such as mechanical engineering, chemical engineering, and materials science. In contrast, transportation engineering and digital logic are typically covered only in civil engineering and computer science and engineering, respectively. This combined data set, with similar and different content areas, enabled us to look for patterns across contexts in ways that single content area data sets cannot.

3.1 Description of data set and collection methods

Although collected by different researchers for different projects, there are sufficient commonalities across the data collection methods and within the guiding assumptions to facilitate combining the data. All interviews were conducted with the goal of eliciting students' understanding of a set of engineering concepts by providing them with a problem or question. These interviews were informed primarily by cognitive-focused theories, exploring the content and structure of students' knowledge rather than the social interactions around knowledge. Students were asked to verbalize their thought process while working the problem, reasoning through the answer to a question, or interpreting a diagram or video we provided. These interviews were generally formatted as a clinical interview—one in which the interview questions encourage the participants to make statements that can be expected to reveal their thought processes under later analysis [49–50]. Clinical interviews drawing on verbalizing techniques as described above are historically the most common method for investigating students' conceptual understanding [51–52]. Thus, the commonalities in the individual data sets include purpose (student understanding of content-specific difficult concepts), participants (undergraduate students in engineering), and interview protocol (semi-structured interviews with open-ended questions focused on articulating understanding of a cognitive task).

Importantly, the design of the interview protocols includes a shared set of guiding assumptions. These same assumptions hold for our secondary analysis:

- Students' resources (cognitive, dialogical, etc.) for answering questions or solving problems are consistent enough to be described by research and influence student learning, and that students' responses during research interviews represent

Table 1. Summaries of previous work used to generate our data set

Conceptual Content	Summary of Research	Citations
Mechanics of Materials (150 interviews)	• 120 semi-structured, clinical demonstration to investigate student understanding of stresses due to bending, stresses in axially loaded members, shear and moment diagrams	[39]
	• Longitudinal study of sophomore to early-career engineering students' understanding of mechanics of materials (approximately 30 interviews)	[40]
Transportation Engineering (150 interviews)	• 75 semi-structured clinical interviews comparing faculty, engineer, and student conceptions of sight distance and stopping sight distance	[41]
	• 75 semi-structured clinical demonstration interviews investigating student understanding of signalized intersection design	[42]
Fluid Mechanics (110 interviews)	• 30 semi-structured interviews using questions from the Fluid Mechanics Concept Inventory [48] • 50 semi-structured interviews using questions from the Fluid Mechanics Concept Inventory [48] • 30 Longitudinal interviews of sophomore to early-career engineering students' understanding of fluid mechanics	[43]
Digital Logic (29 interviews)	• 30 semi-structured clinical interviews to investigate student understanding of digital logic sub-topics such as number representations, Boolean logic, medium-scale integrated circuits, and state	[7, 44–47]

Note: Numbers of interviews are approximate.

meaningful applications of those resources [33, 53–55].

- Our data represents episodes where students apply their conceptual understanding to achieve their goals in response to their interpretations of the interviewers' questions [56–58].
- Each student makes sense of the questions and content in an individual way but, in general, meaningful patterns arise that make collective interpretations of the students' responses valuable [53, 59–60].
- Researchers' analysis of student statements is colored by their own unique understandings of the context and content, and although researchers are more likely than students to be motivated to reflect on the limitations of their own interpretations, any individual researchers' interpretation is still inherently limited by their adopted theory and theoretical framework [33, 60].
- All of our interview data was conducted in a context that is unique from students' everyday educational experiences, in that students were interviewed in a conference room-like setting and verbally asked about their knowledge of engineering concepts. While this setting almost certainly impacts students' responses, and, therefore, their "knowledge" of the subject, our assumption is that there is still value in data from this controlled setting. This assumption follows years of research on student understanding and any educational research efforts that use interview data.

3.2 Analysis

To perform the secondary analysis, we expanded on traditional methods of analyzing clinical interview data of student conceptual understanding by strategically combining the analyses of two researchers with differing levels of familiarity with the content (see also [61]). The basic analysis process consisted of two phases: emergent analysis and thematic analysis.

3.2.1 Emergent analysis

The emergent coding process is an essential part of Glaser's [43] "constant comparative" method of qualitative analysis. The process requires reading through the data (in our case, transcriptions of clinical interviews) and identifying repeated incidents that could be defined as members of a category that share a common feature. The method depends on reevaluating the categories as new data is analyzed; we might either expand the category, or narrow its definition as appropriate.

In our case, the emergent phase of the analysis took an interactive approach where a content novice (with regard to the particular interview content) led a content expert; the content novice would develop categories emergently, then share and explain them to the content expert. The content expert's role was to challenge the categories, and to suggest refinements or changes based on their understanding of the content material. For example, in a few cases the content novice identified a pattern in student responses and interpreted it as meaningfully revealing of the students' preferred approaches to a problem only to learn from the content expert that the apparent "peculiarity" was a common practice in the field and students' were likely only repeating formulations common in their lectures, homework, textbooks, and exams. We defined a content novice as someone having one or two pertinent undergraduate courses within the last 10 years without any follow-up engagement with the material. This enabled content familiarity but not expertise. In contrast, the content expert had significantly more experience in the content area, including at least undergraduate and graduate work. In this way the content novice was at least familiar with the content but likely did not have the same bias as the content expert.

Through iterative movements through stages of instruction, coding, and discussion, the pair came to shared interpretations of the data. Importantly, this approach approximated researcher triangulation [62–63] to enhance the credibility of this analysis. Hence, the content novice-expert pairs enabled the identification of bias, such as expert blind spot, and led to challenges of assumptions and further data examination and discussion until agreement was reached. In this unique approach, the novice represented the student participant perspective better than the expert such that essentially two different views are offered on the data. Note that the expert-novice pairs rotated roles depending on their perspective on each data subset such that an expert on one subset might be a novice on another.

3.2.2 Thematic analysis

Finally, after both the content expert and the content novice had each explored the data sets multiple times, the developed sets of categories themselves were analyzed. As a specific example, both the content expert and the content novice found that students often related Boolean logic to computer programming and that reasoning in this line tended to diverge from the correct answer. No similarly distracting sub-discipline (i.e., computer programming as a competing domain for Boolean logic) was found in the context of mechanics of materials interviews. Similarly, when examining the student interviews regarding axially loaded members, both researchers noted the common student tendency to conflate the concepts of normal force, normal stress, normal strain, and axial loads into the same general concept, despite their fundamental differences as different types of phenomena; however, no similar trend was observed in the context of Boolean logic. Taken together, however, both these findings imply a fundamental difficulty of students to differentiate between superficially similar concepts (Boolean logic and pseudo-code, or normal force and normal strain). We refer to these "patterns-in-the-patterns" as "themes," and the process of identifying, testing, and elaborating them "thematic analysis" [65]. The findings presented in the Results section are themes in that they are common elements we have identified that tie together categories and common student tendencies.

4. Results

Through our analysis, two themes emerged that begin to address our research question, "What are the patterns in engineering students' conceptual understanding across concepts from four engineering sub-disciplines?" Our first pattern consists of students' tendencies to inappropriately group dissimilar phenomena, processes, or features. Though this happened in distinct ways across each of the four fields it was a common tendency. The second pattern identifies students' tendency to use oversimplified causal narratives in their reasoning. Both of these themes are discussed below and supported by examples from each of the sub-disciplines included in this analysis. Findings are qualitative and thematic, so we do not indicate the proportion of students who demonstrated a particular pattern.

The purpose of this paper is to report findings across multiple content areas, which means that readers may find themselves trying to interpret student understanding of technical material they are not familiar with themselves. There is obviously not space in a single paper to summarize the engineering content covered by this data set, but sufficient technical detail must be included to properly characterize the nuances of student understanding we wish to report. To guide the reader, we have included generalized (not referring to specific content areas) summaries for each theme and content-specific themes (Tables 2 through 8 and Figs. 1 through 4, respectively). Moreover, to ease the comprehension of the results from a variety of content areas, the examples are intentionally limited to a single concept in each sub-section, and concepts are repeated in other sub-sections when possible.

4.1 Students often inappropriately group dissimilar phenomena, processes or features

We find repeated examples in each content area of students inappropriately conflating concepts. Essentially, students are combining things that actually need to be defined separately in order to fully understand the course content. For example, in mechanics of materials we find that students latch on to two key terms ("normal" and "shear") and use them to conflate fundamentally different phenomena. In digital logic we see students fixated on the superficial similarities between two components to the detriment of their defining functional differences. In our data on student understanding of fluid mechanics, we frequently find students trying to reason with an aggregate concept of "flow" that encompasses all the pertinent fluid flow properties presented in the course. Finally, in transportation engineering we see students treating any stops at an intersection as a failure, and thereby inappropriately grouping the normal functioning of an intersection (which, by definition, must include *some* stopping) with unnecessary delay.

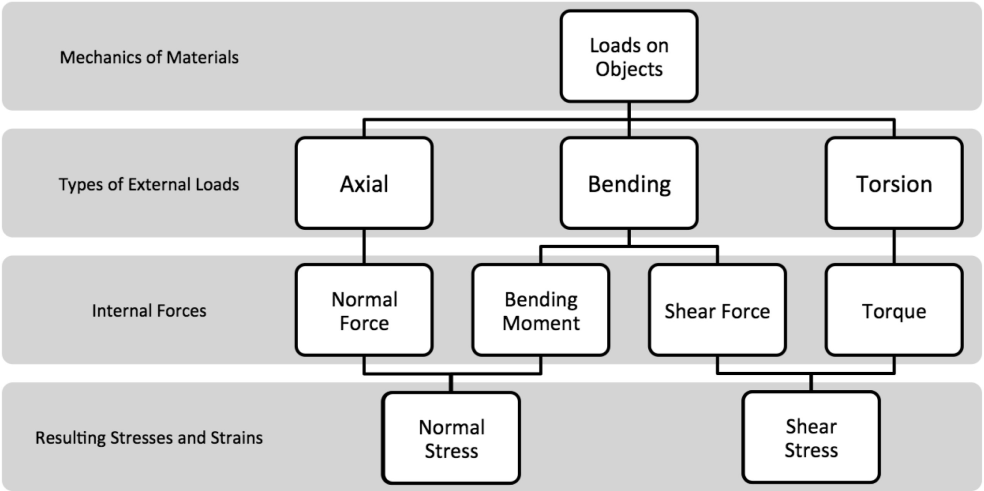

Fig. 1. The authors' high-level representation of the important distinctions in mechanics of materials.

Table 2. Summary of student understanding of the hierarchical relationships between external forces and internal reactions

Concepts	Student Conceptions
When an object is subjected to forces, internal reactions occur. There are a number of important distinctions to be made as to the type of external force, and the different types of internal reactions.	"Normal" versus "shear" is the most important distinction to be made. All forces and deformations are essentially "normal" or "shear."

Relation to Theme: Students group together loads, internal forces, stresses, and strains as being either "normal" or "shear." This is surprising and problematic because much of the conceptual and analytical content of Mechanics of Materials describes relationships between those features that students have grouped together as being essentially the same.

4.1.1 Mechanics of materials

Mechanics of materials is the analysis of what happens inside an object when forces are applied to it without causing it to move. A major component of mechanics of materials is calculating the stresses that occur when an object is loaded (stresses are the microscopic forces that hold an object together and resist whatever forces are applied to it). All stresses are either normal (metaphorically analogous to a spring compressing or being stretched) or shear (metaphorically analogous to the blades of scissors sliding past each other). Students are taught to calculate these stresses using the internal forces that arise as a result of external loadings. The analysis of stresses depends on categorizations of external loads as either axial, bending or torsion and internal loads as normal forces, bending moments, shear forces, or torsional moment. Fig. 1 summarizes the relationship of these distinctions and categorizations. In our interviews, students maintained strong distinctions between the concepts of "normal" and "shear," but usually did not distinguish between stress, strain, force, or deformation. They instead preferred to reason with aggregated concepts of "normal" and "shear" (see Table 2 for a summary).

Students' aggregated concepts were not functional in many contexts. For example, students were asked where the maximum normal stress would occur in a member, and then a few minutes later asked where the maximum normal strain would occur. Most students incorrectly indicated that maximum stress and strain would occur at the same location. Stress and strain are related, but strain can occur in the absence of stress in a particular direction. For example, in an axially loaded member there is strain in the direction perpendicular to the load, but not stress, because of the dimensional change in that direction.

As a further example, students were asked to draw the normal stresses occurring at a point and to describe what they had drawn. Students described their drawings in terms of forces. In response to the question, *What types of stresses are those?* one student responded, "axial load again," referring back to her previous answer to the question, *What internal forces are present?* Some references were less clearly conflations of the concepts of stress and force, but were still notable for their insistent avoidance of the term "stress." For example, one student described his drawing by saying, "so it just would be, all the normal forces put the element in tension." When asked how to calculate the normal stresses he had drawn, the student said that they would be equal to "P," which was the label given to the axial load applied, and is also the most common variable to assign to internal normal force. Additionally, many students avoided the use of any terms other than normal or shear, for example when referring to every normal force, stress, strain, and deformation they used the word/phrase "normal" or "the normal," as in "it's just normal, there's no shear."

The researchers were only sensitized to this issue of student vocabulary after analyzing the interview data, and the interviewer very freely made use of the technical vocabulary so that nearly all of the questions explicitly included the terms stress, strain, or force as well as distinguishing whether normal or shear phenomena were being discussed. Students misused terms or neglected the differences between stress, strain, and force despite these subtle prompts from the researcher. Additionally, very few of those interviewed confused the terms "normal" and "shear" in a similar fashion. Regardless of what else students understood or what questions they were able to answer, they maintained a strong verbal distinction between shear and normal, while simultaneously ignoring the interviewer's distinctions between stress and force.

4.1.2 Digital logic

Students use basic digital circuit components (logic gates) to construct more complicated circuits that provide commonly used functionality such as selecting between multiple data sources. Although they are represented similarly in schematics (a box with lines pointing in and out), and are often presented in the same chapter or lecture in digital logic courses, multiplexers and decoders are structurally and functionally different. Multiplexers manage data transmission by *selecting* one data input from

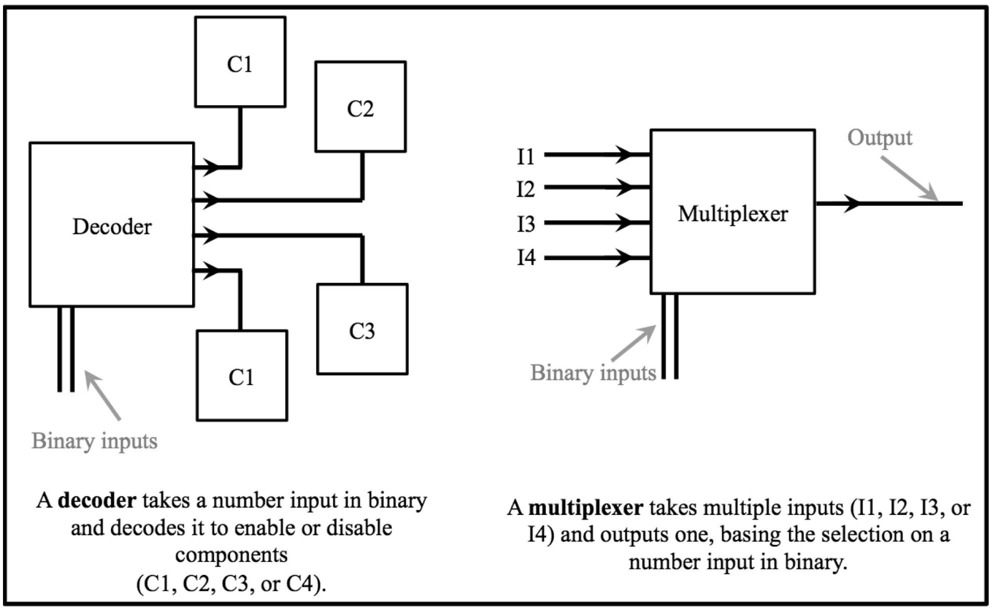
C1
C2
Decoder
C3
C1
Binary inputs
A **decoder** takes a number input in binary and decodes it to enable or disable components (C1, C2, C3, or C4).
I1
I2
I3
I4
Multiplexer
Output
Binary inputs
A **multiplexer** takes multiple inputs (I1, I2, I3, or I4) and outputs one, basing the selection on a number input in binary.

Fig. 2. Summary of the differences between decoders and multiplexers.

among many to transmit to another component as indicated by a binary encoded selection input. Decoders *decode* an encoded binary input to determine which components in a larger circuit to enable or disable (Fig. 2). In our data, we found that students tended to inappropriately conflate multiplexers and decoders based on their superficial similarities, such as appearance or temporal proximity of learning, rather than distinguishing them based on function or structure (see Table 3 for a summary).

By inappropriately grouping multiplexers and decoders, students limited their ability to make sense of either concept. For example, when asked about the general purpose of decoders, many students tried to explain them in terms of contrasts with multiplexers, but failed because of their assumption of fundamental commonalities. One student responded, "a multiplexer is an electronic component that . . . et's see . . . it basically takes . . . how would I describe this . . . it takes a couple wires in, it takes like N wires in and spits out 2 to the N wires? [. . .] A decoder is another component [draws box] it has a bunch of wires going into it and . . . well, it's got a bunch of wires going into it, and some of which are used to select what's passed out . . . now that I think about it . . . I'm not entirely sure if I mixed up decoder and multiplexer or not." Many students, like this one, focused on the physical appearances of the multiplexers and decoders as they are presented in class, discussing "wires" that go "in" or "out" rather than on the purpose or functionality of the components. Students focused on the functions of the two constructs, but again became confused when trying to apply their assumptions about basic similarities. One student reasoned, "Decoders . . . So MUXes [sic- term for multiplexers] are taking several inputs and outputting . . . decoders take . . . I really want to say that a decoder takes several inputs and output one . . . I'm thinking if a decoder outputs . . . takes several outputs . . . I mean inputs . . . if a decoder takes several inputs and outputs one output or if it takes one input and outputs several outputs . . . I'm going with outputs . . . several *[draws 4 out]*

Table 3. Summary of student understanding of the differences between multiplexers and decoders

Concepts	Student Conceptions
Multiplexer: a combination of smaller circuit components that selects between multiple data inputs via selection inputs, outputting only one data signal.	Multiplexers and decoders are basically the same, except that multiplexers have multiple inputs and decoders have multiple outputs.
Decoder: a combination of smaller circuit components that activates or deactivates outputs based on an encoded binary input signal.	
Relation to Theme: Students group multiplexers and decoders together by trying to define them relative to each other (e.g., "a multiplexer is like a backwards decoder"). This grouping is problematic because such components are defined entirely by their functions, and decoders and multiplexers have fundamentally different uses.	

for 2 inputs *[draws 2 in]*." The construction of the two student quotes are strikingly similar; both students start several lines of reasoning and shift their focus from multiplexers to decoders in searching for a meaningful way to describe either one based on the physical characteristics of the drawn circuits.

Most students who were able to distinguish between multiplexers and decoders did so using artificial and ineffective metrics and were unable to apply their understandings to design problems. One student stated, "Decoders go smaller to larger, MUXes go larger to smaller," and a significant minority of students attempted to define decoders and multiplexers as "opposites." These distinctions, while not incorrect, were not useful to the participants when they were asked to schematically design a particular multiplexer or to explain or predict the outputs from decoders and multiplexers. In particular, defining MUXes as devices that go from "larger to smaller" does not include the function of a MUX, and therefore does not remind students that they can be used to select one data input from many to send to the one data output.

4.1.3 Fluid mechanics

In fluid mechanics, students are often asked to relate various characteristics of a flowing fluid to one another. Most often these characteristics are volumetric flowrate, velocity, pressure, and flowing area (i.e., the size of the pipe or channel conveying the flow). Because of the conservation of energy, it is often possible to relate any two of these characteristics given the appropriate measurements. Students are taught to consider fluid flow as a dynamic equilibrium of mass and energy, where the energy is balanced between three forms: elevation (a form of potential energy), velocity (a form of kinetic energy), and pressure (another form of potential energy). Fig. 3 presents an example of this energy balance. Students often struggled to understand this balance however, and often used an aggregated concept of "flow" which seemed to include elements of pressure, volumetric flowrate, and velocity. These characteristics are closely related, but students would gloss over important functional distinctions by occasionally treating them as interchangeable or synonymous (Table 4).

Students were asked to compare the velocity and

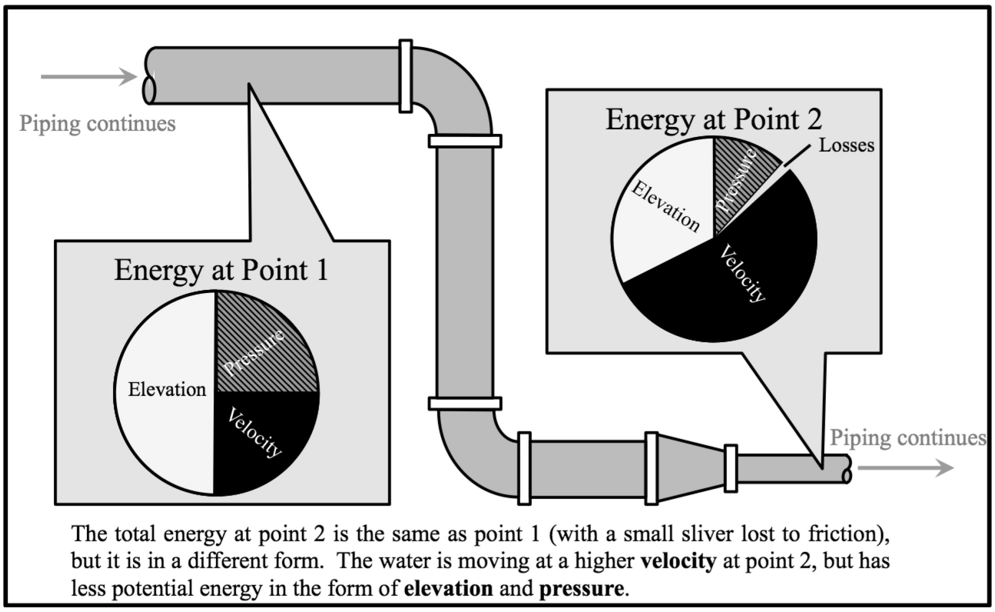

The total energy at point 2 is the same as point 1 (with a small sliver lost to friction), but it is in a different form. The water is moving at a higher **velocity** at point 2, but has less potential energy in the form of **elevation** and **pressure**.

Fig. 3. Summary figure presenting fluid flow as an equilibrium between three different forms of energy in the flowing fluid.

Table 4. Summary of student understanding of the characteristics of fluid flow

Concepts	**Student Conceptions**
Fluid flow is a dynamic equilibrium of mass and energy. Energy is balanced between kinetic (the velocity of the flow), potential (the elevation), and pressure.	"Fluid flow" is single idea made up of pressure, velocity, elevation, and depth.
Relation to Theme: Students conflate multiple components of a system (pressure, velocity, energy) together into one concept. They often incorrectly predict how the features of the system will change because they expect all the changes to be in the same direction (e.g., pressure, velocity, and energy will all "go up") rather than complementing or balancing each other.	

pressure in a pressurized pipe before and after the pipe diameter got smaller. Nearly every student correctly stated in some way that "flow" would remain the same. In terms of the mass or volume flowrate, students are correct to state that it will remain the same. Students incorrectly extended this idea using their conflated idea of "flow," however, to also claim that pressure and velocity would stay the same. Velocity will increase in the smaller section of pipe (to comply with conservation of mass), and pressure will decrease (to comply with conservation of energy.)

In some ways, students' reasoning is admirably complex. As evidenced by their own explanations, many students were drawing on the continuity equation. This equation states that because mass is conserved in a closed system, the mass or volume flowrate must be the same at any two points in that system. Many students extrapolated from that concept to reason that because the area was decreased in the section of pipe with the smaller diameter, the velocity must increase in order to maintain the same volumetric flowrate. Students' reasoning fell apart, however, when they attempted to apply their concept of flow to the question of how the pressure would change. Some students argued that the pressure would stay the same, and supported this claim by restating that the "flow" would be the same. Others decided that the pressure must increase if the velocity increased because, again, the "flow" would be the same. Because students were using a conflated concept that referred generally to the whole flow regime, they were unable to successfully use this concept to distinguish between pressure and velocity. Most students confidently applied the continuity equation to determine that the velocity would increase, but then inappropriately tried to relay this finding into a statement about the pressure, assuming that they were both aspects of the same "flow."

Students particularly confused volumetric flowrate and pressure; for example, by referring to the "pressure flow" or stating that houses drawing water from the system would be causing "pressure losses" or "using pressure," as if the pressure was a substance of limited quantity flowing into the homes. Pressure is a property of the fluid, and the pressure in a pipe and system of pipes certainly changes over space and time (e.g., pressure can decrease over the length of a flat and uniform diameter pipe as a result of energy loss). However, pressure is not used up in this process. Such usages often led students to incorrectly treat both pressure and flow as the cause and effect of the other. Students were typically aware of their confusion of these concepts, but unable to identify the source of the difficulty. For example, in the following exchange a student was asked to explain his statement that a new reservoir would increase the pressure of the water system at a point:

> Interviewer: Right, yeah. So how would it increase the pressure there?
>
> Student: This is applying the pressure, and this has some flow rate. This is creating a flow rate here. This is creating a flow here. So I guess it would have to contribute to the system increasing pressure.
>
> Interviewer: Okay. Because of the–because of what?
>
> Student: I'm trying to remember how pressure is actually calculated if it's based on the height of it. It's a pressure pounds per square inch. We're given a height here. My mind is all over the place right now.
>
> Interviewer: Okay we can move on. I don't want to interrupt you though if you want to finish this.
>
> Student: One or the other needs to be known because flow rate is by number the weight per cubic volume.
>
> Interviewer: You said "one or the other needs to be known." Which two things are you referring to?
>
> Student: Pressure or flow rate, so the pressure is going to be based on gravity which is I don't remember, some constant. So pressure is going to be based on you have gravity affecting some area at the top of the tank to create a pressure. Elevation plays into that. Yeah, I'm all over the place. Now I'm just confusing myself.

The student clearly communicates the experience of the confusion ("my mind is all over the place right now"), and incorporates a number of partially correct and useful concepts and observations (e.g., that the pressure in this system is determined by gravity which is measured as elevation). However, the student is fundamentally confused about the differences between pressure and flow in this context. His clearest and first idea is that "This is applying the pressure, and this has some flow rate." He is then unable to determine the difference between those two statements because, for him, pressure, velocity, and flow are amalgamated into a single concept.

4.1.4 Transportation engineering

In intersections that are controlled by traffic lights with sensors (rather than just timers), two different events can cause the green indication to change: a gap out and a max out. A gap out occurs when too much time elapses between the sensors detecting new cars approaching the intersection (i.e., the "gap" between cars is too large), and a max out occurs when a predefined maximum amount of time passes without a gap out. Gap outs and max outs are defined by design variables that indicate how much time is allowed to pass between vehicles being detected and how long a single green indication is allowed to continue without changing. The only way a green light can change is through either a gap out or a max out (Fig. 4). In this study, we found that students inappropriately associated both gap

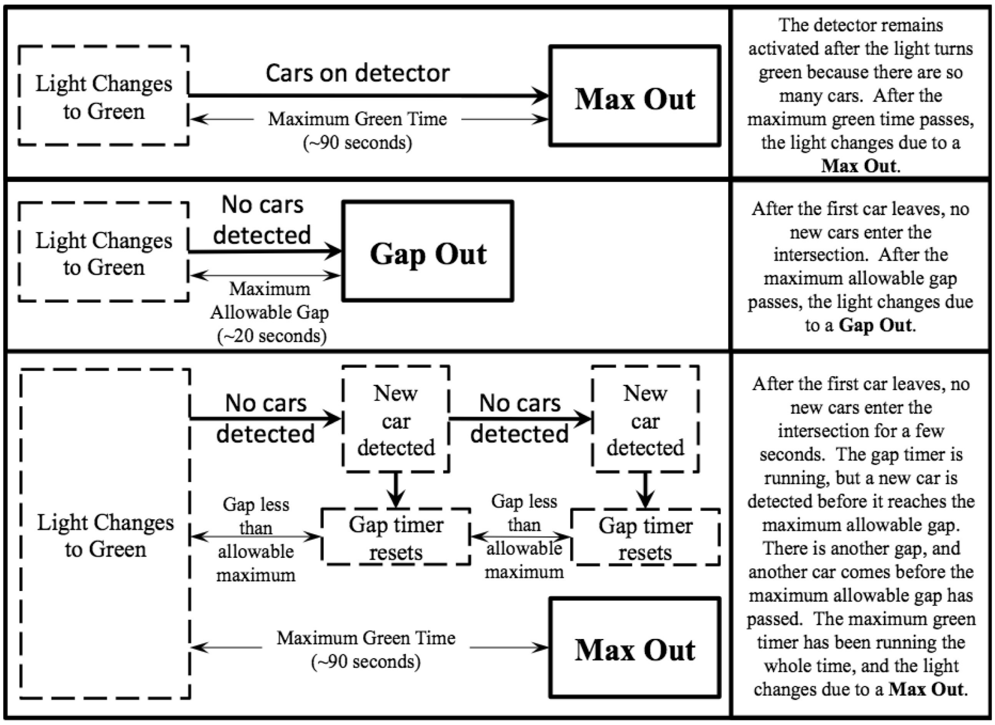
Light Changes to Green
Cars on detector
Maximum Green Time (~90 seconds)
Max Out
The detector remains activated after the light turns green because there are so many cars. After the maximum green time passes, the light changes due to a Max Out.
Light Changes to Green
No cars detected
Maximum Allowable Gap (~20 seconds)
Gap Out
After the first car leaves, no new cars enter the intersection. After the maximum allowable gap passes, the light changes due to a Gap Out.
Light Changes to Green
No cars detected
New car detected
No cars detected
New car detected
Gap less than allowable maximum
Gap timer resets
Gap less than allowable maximum
Gap timer resets
Maximum Green Time (~90 seconds)
Max Out
After the first car leaves, no new cars enter the intersection for a few seconds. The gap timer is running, but a new car is detected before it reaches the maximum allowable gap. There is another gap, and another car comes before the maximum allowable gap has passed. The maximum green timer has been running the whole time, and the light changes due to a Max Out.

Fig. 4. Three examples of how a controlled intersection could end a green light.

outs and max outs with a failure of the intersection (Table 5).

Although students were easily able to explain the differences between gap outs and max outs, they were often unable to predict which would occur in a given situation, especially when those predictions carried implications of design flaws or failure. For example, students were asked whether a gap out or max out would occur if a particular design variable were set to be "less than optimum." This design variable relates safety and design speed to gap timers, and is usually designed to cause gap outs so that low-traffic lanes get less "green time" than high-traffic lanes. Because students associated gap outs and max outs with failure, many of them tried to develop a direct relationship between the design variable in question and the occurrence of specific gap outs or max outs, saying for example, "Yeah, if it [referring to the design variable] is too small you'll probably have a gap out." This student significantly referred to "a gap out," showing that their reasoning equated a sub-optimal design variable with a specific one-time occurrence. This was the most common kind of response to this question. More productive reasoning would not argue that the design variable would cause *a* specific gap out or max out, but would cause gap outs and max outs to occur in patterns that hindered the flow of traffic. The students' reasoning makes sense, however, in light of their conflation of the concepts of failure and gap out or max out.

A particularly clear example of this conflation of concepts occurred with a student who was above average in her ability to explain the concepts of max outs and gap outs. Part of the interview process was to show the participants a video clip of an animated intersection, including a text box listing important design variables and measurements. This student

Table 5. Summary of student understanding of how the lights change in an actuated signal

Concepts	Features of Student Understandings
Two events are used to cause the lights to change in an intersection controlled by sensors and traffic lights: **Gap out** occurs where there is too large of a gap between cars entering the intersection. **Max out** occurs when the green light has been green for the maximum amount of time allowed for a single green light.	Gap outs, max outs, and cars waiting are forms of failure for intersections.

Relation to Theme: Students inappropriately conflate the idea of an intersection failing and the features of its normal function. Failure is in fact defined by delay times, while "gap outs" and "max outs" are simply mechanisms to trigger a traffic light to change.

correctly identified where the gap out occurred, and strongly implied that this gap out was an intentional result of the design, saying, "Essentially that means there wasn't as much traffic over there in the queue compared to the right where there was a long queue built up . . ." At this point, the student appears to be using the concepts of gap out and max out separately as potential design outcomes. The next question in the interview, however, is "what does it mean to say that a phase terminates too early?" The student is slow to respond to this question, and turns to the animated intersection as an example, saying, "for example, on the right hand side where there is a large queue, if it terminates too early that means that the queue wouldn't have all been served, so only like half of the queue would have been served and that leads to cycle failures and that is something that drivers really do not like." The student has subtly shifted her reasoning from explaining how the system is working (i.e., by triggering a gap out), to describing that same function as a failure (i.e., by triggering a max out). This student's inappropriate grouping of the concepts of gap out, max out, and cycle failure is particularly interesting in light of her otherwise high conceptual understanding. This emphasizes the pervasiveness of this trend in student understanding.

4.2 Students' reasoning using simplified causal relationships

Across our data sets, we found that students seek to find the causes of phenomena under study, and seem to prefer simplistic, one-to-one causal relationships. These tendencies persist even in the face of directly contradictory instruction. In mechanics of materials, students repeatedly assume that internal forces will look just like external loads, and justify this assumption with the reasoning that the loads cause the internal forces. In digital logic, students treat a simple logical relationship as a causal relationship, and therefore make incorrect assumptions about how the logical relationship will function. In fluid mechanics, students tend to see the fluid flow as a phenomena that is caused by the physical system, causing them to ignore features of flow that causally affect other elements and to place undue emphasis on obvious physical features (such as the roughness of the pipe) that do not exert a large influence on the flow. Similarly, in transportation engineering, students assume that a causal relationship defines the system they are in fact learning to design.

4.2.1 Mechanics of materials

The relationship between applied loads and internal loads and stresses is a complicated interaction of geometry and material properties. As shown in Fig. 1, the same kind of loading can result in different kinds of internal reactions (i.e., internal forces and stresses), and the same internal reactions sometimes result from different external loads. Students in our study, however, incorrectly attributed singular and direct causes to the internal reactions.

When discussing bending, for example, students often assumed a direct causal relationship between the applied load and the resulting stresses rather than analyzing how the loading and member geometry resulted in combinations of normal and shear stresses. As discussed in the previous discussion of mechanics of materials, many students argued that bending would not cause normal stresses. Their justification of this statement was based on the fact that there were no loads acting in the direction that they believed the normal stresses would be acting. The correlation between the direction of external load and the nature of internal reaction simplifies the entire subject of materials of mechanics into a simple, one-to-one causal relationship. Fig. 1 is intended to show, among other things, the difficulty in attributing any singular cause to a phenomenon of interest.

A significant proportion of the students that made this argument were also able to calculate the normal stresses as a result of bending, or even sketch their distributions. This inconsistency highlights the fact that their difficulties related to their understanding of the *causes* of the normal stresses and their assumption that those causes must be obvious and direct (such as a force acting in the same direction). When this critical step was skipped or simplified somehow (for example by simply asking students to calculate or draw the normal stresses, instead of asking if there *were* normal stresses), students recalled key equations and performed the calculations easily.

When asked to compare the intensity of internal stresses as a result of bending, students reasoned that they would be the highest closest to the point loads, again reasoning that the applied loads directly, locally, and immediately cause stresses in the member. As evidence of this, students described the intensity of normal stresses as depending only on the distance from the point load; for example, arguing that it will be "worst" directly under the load or "really deformed there."

Again, this suggests an expectation of sequential, observable relationships between causes and effects, and again this expectation seems to eclipse other forms of understanding (i.e., the students' own calculations or diagrams). In a revealing variation, some students related normal stress to moment, and could draw the distribution of moment in the beam, but did not use this understanding when asked about normal stresses in the beam. In one case, the student even wrote the three-term equation that relates moment to normal stress but still incorrectly argued that, based on the direction of the loading, no normal stresses were present.

In some cases, students' preferred explanations (that external forces directly cause stresses acting in the same direction as the applied loads) resulted in acceptable answers, despite being based on unacceptable simplifications. For example, under certain loadings the normal stresses in a beam do occur under the applied load. The intensity of the stress, however, is not directly caused by proximity to the load. A more complete explanation (that a coincidence of the beam's geometry leads to the internal moment being greatest under point loads, combined with the fact that normal stresses are greatest at the upper and lower surfaces of the beam because of their distance from the centroid) may not be clear to readers unfamiliar with mechanics of materials. This difficulty serves as an excellent example of what we mean by "simplified causal narratives." The students' explanation involves two phenomena in a simple relationship: external forces cause internal stresses. The natures of "external loads" or "internal stresses" are largely unimportant to their relationship. In our explanation, however, external forces are described in terms of geometry in two dimensions as well as the analytical construct of "internal moment" before being related to internal stresses.

4.2.2 Digital logic

In Boolean logic, Boolean functions are created by evaluating the interactions between two or more independent predicates (or variables). For example, the statement "there is a stop sign" is a predicate that can be true or false independent of a second predicate "a car is coming to a stop"; a stop sign may exist independent of a car's motion and a car may stop in the absence of a stop sign. A Boolean function describes the relationship between these independent predicates when they interact with a dependent law such as "If a stop sign is present, then a car must come to a stop." When students reason about Boolean expressions, they often use simplified causal reasoning (A causes B to happen) rather than more appropriate analysis of independent predicates (see Table 6 for a summary).

Students were asked to explain the meaning of the expression "IF-THEN" in Boolean logic. Students explicitly stated it was causal, saying for example, "If A then B, I would say it's like a cause and effect type of relationship where if whatever A is true then that means that B is automatically true." This statement is akin to incorrectly saying that a stop sign "automatically" causes a car to stop. When providing examples for their reasoning, students used simplified causal chains, "Like, if it is true that it's raining, then it's also true that you should use your windshield wipers. But then if A isn't true, if it's not raining, then there's no reason to use your windshield wipers." This simple causal reasoning ignores the crucial independence of the two predicates (A and B) and replaces the conditional logical relationship (i.e., a set of conditions that need to be met in order for the statement to be "true") with a more familiar, but ultimately misleading causal relationship in which one predicate (A) leads to the other (B). Students introduced volition or obligation as the causal agent ("*Should* use your windshield wipers"). This context provides an interesting contrast with the other content areas because in this context the students are introducing the idea of causality into an inappropriate context, rather than applying overly simple causes to the phenomena they are asked to explain.

4.2.3 Fluid mechanics

In our studies of fluid mechanics, students' reasoning was often focused on identifying causes and agency, despite the explicit focus of the analysis on description, rather than causal attribution. As summarized in Fig. 3, fluid mechanics is best understood as an established equilibrium where some features can be explained as consequences to others, but not direct causes. Students' emphasis on overly simplified causal relationships is the single most prominent feature of their conceptual understanding of

Table 6. Summary of student understanding of IF-THEN statements in Boolean logic

Concepts	**Student Conceptions**
IF-THEN statements are rules that describe the relationship between two independent conditions. IF A THEN B is false (i.e., the rule is broken) when condition A is met and condition B is not. The rule is not broken when condition B is met but A is not, because the rule does not govern this set of circumstances.	IF-THEN statements reveal a causal relationship. IF A THEN B suggests that B cannot occur or be true without A first occurring or being true.

Relation to Theme: Students struggle to apply a basic logical relationship because they inappropriately assume the relationship also involves causal links.

Table 7. Summary of student understanding of the causes of fluid flow

Concepts	Student Conceptions
The energy at any two points in a flowing fluid will be the same if it is accounted for in terms of velocity, pressure, elevation, and friction losses.	A flow's velocity is caused by features of the pipe or channel it is flowing in.

Relation to Theme: Students assume that some system components (the physical features of the pipes or channels) *cause* other system components (e.g., velocity, pressure, depth), ignoring all the course content describing the dynamic balance between the various system components.

fluid mechanics. Our studies included open-channel and pressurized pipe flow, and questions at the system (e.g., predicting the effects of changes on a small water distribution system) and component (e.g., predicting the behavior of a single section of pipe) levels. In particular, students seemed to treat velocity as the result of the other features of the flow or system (see Table 7 for a summary).

When asked how changes in an open channel system (e.g., changing channel roughness, a weir, or a drop in the channel bottom) would affect the flow characteristics, students reasoned that the feature of interest would cause a change in velocity, which would cause a change in channel depth according to the conservation of mass. This is incorrect because it assumes a causal chain between certain features of the channel and flow depth. In almost no circumstances is there a direct relationship—upstream and downstream features of the channel and flow affect the balance of energy at any particular point, and therefore changes at a point cannot be considered as directly causing predictable outcomes.

Similarly, students used the equation form of the conservation of mass (volumetric flow rate equals the velocity times the area of flow) as a causal relationship governing pressurized pipe flow. For example, one student reasoned, "I'm trying to come up with an equation relating pressure to velocity and area. That's what I'm thinking. I guess that'd be flow. Flow is velocity and area.... So you can increase the flow by increasing either the velocity or the area. So obviously if you increase the area you increase the flow without changing the velocity. I'm not sure how flow relates to pressure." Similarly to other student statements, this one assumes that changes to any variable in the equation will cause corresponding changes to the other variables. There are obviously relations between variables in these fluid equations, but not in the simplified way that students portrayed them.

Even when discussing pressure without reference to equations, students preferred a direct, single-agent cause. Most students, for example, viewed pressure in a pressurized pipe system as being a result of the water being "squished" or "forced" into the pipe. This reasoning is interesting in that it highlights the students' tendency to reason using direct causal agents, even in the absence of any such explainable agent because most students could not explain what was "forcing" water through the pipes. For example, one student reasoned that pressure would increase in a smaller pipe because "So all the pressure is being—all the water's being compressed when it gets to these changes in diameter, so it has to—so it experiences more pressure as it goes through the pipe." Both of the students' attempts at describing what happens (". . . so it has to—so it experiences . . .") are notable for their focus on a causal linkage using the word "so," and their lack of a direct cause. The student is unable to say why the water "has" to do something, or why it "experiences" more pressure. In explaining the same prediction (that pressure will go up in a smaller pipe) another student said, "Because if they're trying to press the volume, basically, the flow here needs to stay the same here in a smaller area. So with the velocity increasing the pressure. So more water has to go in that small area or go through it." Again there is an emphasis on what "has" to happen, but this student also refers to a non-specific "they" who is pressing the water into the smaller pipe.

4.2.4 Transportation engineering

Transportation engineering provides a particularly interesting case in terms of students' tendency to assume inappropriately simple causal descriptions because the phenomena under investigation are largely designed systems in which the causal relationships are introduced by the designer. For example, in the logic map shown in Fig. 4, the times shown as gray bars (the maximum green time, maximum allowable gap, and passage time) are all chosen by engineers to maximize the efficiency of the intersection—they are related primarily by their purpose in achieving the engineer's overall goal. Even in this context, though, it is possible to see students' preference for direct causal explanations that are often too simplified to be applied to problem solving. In this study, students preferred to explain the relationships between variables as one of direct cause, rather than one mediated by the purposes and goals of the designing engineer.

For example, students were asked to describe the relationship between "passage time" and "detector

Table 8. Summary of student understanding of the relationship between passage time and detector length

Concepts	Student Conception
Passage time and detector length are balanced to achieve specific goals, including the minimizing of delay.	Higher passage time causes lower detector length.

Relation to Theme: When learning how to design a system so that it works well together, students inappropriately assume that one part of the system (passage time) *causes* a change in another part of the system (detector length), instead of recognizing that the system must be intentionally designed to maintain the relationship between them.

length." Passage time is the estimated amount of time required for a car to clear the intersection, and is therefore an important design variable in determining the timing of the lights. Detector length refers to the sensors used to detect when cars are approaching or entering an intersection. A longer detector means that cars must travel a longer distance between being detected and clearing the intersection, and will therefore require more time. This fact would need to be considered by the designer determining the passage time. Students ignored the role of the designer in their responses, and instead described the situation as a direct causal relationship between the detector length and the passage time (see Table 8 for a summary).

Students approached the relationship between passage time and detector length as an equation:

> Interviewer: What other variables affect passage time?
>
> Student: So passage time there, we have maximum allowable headway [indicating an equation written down] so more passage time, more maximum allowable headway. We have the detector zone length, the more passage time, the less detection zone length. We have length of vehicle. Because the equation is maximum allowable headway equals passage time plus detection zone length plus length of vehicle over or divided by this.
>
> Interviewer: How does detection zone length affect the setting for passage time?
>
> Student: So, for passage time, the more passage time, the less detection zone length or the more detection zone length the less passage time. It will be in the opposite direction.

This explanation moves beyond the typical two-variable approach, but still emphasizes a one-to-one explanation where one variable causes an up-or-down change in another, which leaves out the crucially important mediating role of the designer.

Students assumed a direct relationship without referring to an equation or variables. For example, one student reasoned that a longer detector would lead to less passage time because "Yeah, in that vehicles would be detected farther from the intersection. So the gap out wouldn't occur as soon, I think." This reasoning follows the reasoning that the detector length and passage time are directly related, this time through the phenomenon of a "gap out." As a contrast, consider a different student's explanation of the relationship between two important variables.

> Student: If it's longer [referring to detection length, the first variable]? Probably up [referring to the passage time, the second variable].
>
> Interviewer: Why is that?
>
> Student: Because doesn't the detection measure it from calls being made—the call's being made from the time the front bumper enters the detection zone to the time the back bumper leaves, right?
>
> Interviewer: Mm-hmm.
>
> Student: So maybe you wouldn't need to make it longer, because the call's being made, so passage time won't start until it exits the detection zone, right?
>
> Interviewer: Mm-hmm.
>
> Student: So it would matter more the placement than the length of it.

While this explanation is technically incorrect (placement is fairly standardized, so length is the key variable), this student clearly references the indirect relationship between passage time and detector length as mediated by the designer. He says, "you wouldn't need to make it longer," which is subtly, but significantly different than previous students' reasoning of "the more detector zone length the less passage time."

5. Discussion

The purpose of this research was to identify patterns in engineering students' conceptual understanding that transcend specific difficulties in any one discipline. Two themes emerged from this pattern analysis: (1) students often inappropriately group dissimilar phenomena, processes, or features, and (2) students reason using simplified causal relationships. In this section, we first interpret these findings in light of current literature and then we highlight implications for instructional practice and educational research.

5.1 Interpretation of findings

In the original analyses of this data, the research findings focused on documenting the specific misconceptions or inappropriate schema that hindered students' learning and performance [38, 40, 42, 44–47]. The shortcoming of these analyses was their emphasis on the "what" of students' conceptual understanding. Similarly, previous cross-disciplinary literature studies, such as the synthesis of Streveler et al. (2008), emphasized the "what" of students' understanding and documented that students struggled to understand basic quantities and their interrelationships. Discovering the "what" of students' difficulties (e.g., taxonomies) is a critical first step in understanding how instruction should be structured to alleviate those difficulties, but these prior efforts have lacked the explanatory power that enables transfer across settings. This research study extends this prior work by adopting a study design that forces a focus on discovering the "why" of students' difficulties.

The first theme of *inappropriate groupings* emphasizes the importance of the organization of knowledge in students' acquisition of new concepts in accordance with theories that focus on the coherence of students' knowledge organization (e.g., knowledge-in-pieces or naïve theory). First, students do acquire the vocabulary of the discipline insofar as they recognize that the disciplinary terminology is relevant to their understanding. Students recognize terms such as stress, strain, or force as relevant to a topic and even use them with varying degrees of success, but they struggle to create nuanced meanings that carry discipline-appropriate norms and distinctions for those terms. Second, these inappropriate groupings extend beyond the use of proper terms to the use of symbols and diagrams, as seen with students' struggles with multiplexers and decoders. This type of grouping fails to recognize disciplinary distinctions, and inappropriately links concepts that are represented with arrows and boxes.

This theme suggests a deeper explanation for why students struggle to accurately construct disciplinary knowledge. Students may rely on simple rather than complex organizations of knowledge such that they fail to perceive the complexity of the systems that they are being asked to study. Initial learning efforts result in coarse matches between new terms or concepts to each other or to previously acquired knowledge. These matches can be chaotic depending on what students find relevant. For example, many students matched the terms normal and sheer to horizontal and vertical, respectively. The representation of these terms in forces or stresses on diagrams is reminiscent of axes or force decompositions that students have previously encountered. Hence, the mapping of "normal" to "horizontal" or "sheer" to "vertical" is a simple grouping that facilitates early learning and sense making but obscures the complex atomic interactions that critically distinguishes these two concepts for the expert.

Similarly, the second theme of *simplified causal narratives* reveals students' trajectory from simple explanations to complex. This finding in particular aligns well with Chi's prior work that students prefer directly causal narratives to more complex emergent models [66–68]. However, our observations extend this preference for causal narratives to be preferred over all other types of explanations. This extension is particularly salient in the domains of Boolean logic and signalized intersections, which are synthetic, man-made systems that lack the emergence often found in the natural systems studied by Chi. By "synthetic" we argue that these systems are derived as syntheses of different elements from different scales or approaches to the problems in the domain. In signalized intersections, for example, some components of the system are defined by the physics of acceleration, the psychology of drivers, the neurophysiology of reaction time, the desired average waiting time for drivers, the preferred type and length of sensor, or the intended volume of traffic to be accommodated. Explanations for the processes examined in our data sets are necessarily complex, but they are not emergent. Yet, students still prefer direct, causal explanations in their reasoning.

As with the theme of *inappropriate groupings*, students' use of direct *simplified causal narratives* reveals a commitment to simple rather than complex organizations of knowledge. The rule "correlation does not imply causation" can illustrate this principle. The misconception that correlation implies causation is a simple explanation that is invalidated when the correlation is caused by a more complex system that created the correlation. Similarly, this direct, causal reasoning is a useful form of reasoning, except in the typically complex systems that students encounter in engineering. This reliance on simple versus complex knowledge organizations suggests future directions for research and instructional interventions.

5.2 Implications for practice and research

In our problem statement, we argued that rather than thinking error-by-error or misconception-by-misconception, we need to identify patterns in student thinking that underlie a broad array of conceptual difficulties. To that end, we have identified two such patterns that have implications for instructional practice and for future research.

Both of our themes, *inappropriate groupings* and use of *simplified causal narratives,* suggest that instructors must understand and accept that students' understandings are multi-dimensional and complex. The design of instructional interventions must move beyond identifying what students did wrong and be able to target the mechanisms that facilitated that type of thinking. Our findings suggest that interventions that increase students' comfort with complex systems, akin to Chi's ontology training [69], may offer pathways for alleviating a variety of students' conceptual difficulties. For example, instruction about computing systems could begin with an assembly line analogy rather than introducing each component individually. Each person in the assembly line has a different role and wears a different hat: machine operator wears a hard hat; quality control wears a hair net, etc. The role or function of the individuals and not their appearance is critical in understanding the assembly line, and only certain distinct markings (the hat rather than the eye color or height) are important in interpreting an individual's role. In the same way, to understand a computer architecture, students need to know the various roles of components and the distinct markings (i.e., labeling conventions) that indicate those roles. In providing students with names and examples for complex but easily understood systems, students can create cognitive structures to which they can map future complex systems.

Research must similarly extend our understanding of how students transition from these simplistic conceptual structures to complex structures. Future research could explore to what extent these transitions are developmental and inevitable or to what extent training and experience with complex systems can improve future learning. Alternatively, research can explore how much and how well the nuances and distinctions of a discipline are learned through discourse and becoming embedded into a community of practice.

6. Conclusion

Through this study we identified two themes in students' understanding of concepts from four different engineering content areas. We therefore conclude that there is value in studying students' conceptual understanding with cross-disciplinary datasets. In particular, this approach forces an emphasis on discovering *why* students have difficulties rather than only on identifying *what* difficulties exist. This approach allows one to think systematically about how we can help students learn within engineering. Based on the findings from our study we recommend that future research within engineering education explore how to help students rely less on simple explanations and organizations within the conceptually complex domains of engineering. While initially limited to the four content areas, we believe it is worthwhile to investigate if these patterns hold in a larger dataset.

Acknowledgements—This material is based upon work supported by the National Science Foundation under Grant Nos. 1055356, 1129460, 0618589, 1025205, 1129447, 1129474, and 1150384. Any opinions, findings, and conclusions or recommendations expressed in this material are those of the author(s) and do not necessarily reflect the views of the National Science Foundation.

References

1. J. D. Bransford, A. L. Brown and R. R. Cocking, *How People Learn: Brain, Mind, Experience, and School*, Washington, DC, National Academy Press, 2000.
2. R. A. Streveler, S. Brown, G. Herman and D. Montfort, Conceptual change and misconceptions in engineering education: curriculum, measurement and theory-focused approaches, in A. Johri and B. Olds and *Cambridge handbook of engineering education eesearch*, Cambridge, Cambridge University Press, 2014.
3. R. A. Streveler, T. A. Litzinger, R. L. Miller and P. S. Steif, Learning conceptual knowledge in the engineering sciences: Overview and future research directions, *Journal of Engineering Education*, **97**(3), 2008.
4. P. S. Steif, J. M. Lobue, L. B. Kara and A. L. Fay, Improving problem solving performance by inducing talk about salient problem features, *Journal of Engineering Education*, **99**, 2010, pp. 135–142.
5. S. Carey, Science education as conceptual change, *Journal of Applied Developmental Psychology*, **21**(1), 2000, pp. 13–19.
6. J. Minstrell, Facets of students' thinking: Designing to cross the gap from research to standards-based practice, In K. Crowley, C. D. Schunn and T. Okada (Eds.), *Designing for Science: Implications for Professional, Instructional, and Everyday Science*, Mahwah, Lawrence Erlbaum Associates, 2001.
7. G. Herman, M. Loui, L. Kaczmarczyk and C. Zilles, Describing the what and why of students' difficulties in boolean logic, *Transactions on Computing Education*, **12**(1), 2012, pp. 1–28.
8. A. Jacobi, J. Martin, J. Mitchell and T. Newell, *A concept inventory for heat transfer*, Proceedings of the Frontiers in Education Conference, Boulder, CO, 2003.
9. S. Krause, J. C. Decker, and R. Griffin, R. Using a materials concept inventory to assess conceptual gain in introductory materials engineering courses, *Proceedings of the Frontiers in Education Conference*, Boulder, CO, 2003.
10. S. Krause, J. C. Decker, J. Niska and T. Alford, Identifying student misconceptions in indroductory materials engineering classes, *Proceedings of the ASEE Annual Conference and Exposition*, Nashville, TN, 2003.
11. R. L. Miller, R. A. Streveler, D. Yang and A. Santiago Roman, Identfying and reparing student misconceptions in thermal and transport science: Concept inventories and schema training studies. *Chemical Engineering Education*, **45**, 2011, pp. 203–210.
12. D. Montfort, S. Brown and K. Findley, *Using interviews to identify student misconceptions in dynamics*, Proceedings of the Frontiers in Education Conference, Milwaukee, WI, 2007.
13. J. M. N. d. Oliveira, J. P. E. d.Oliveria and J. Cowan, Conceptual understanding in introductory electronics: An exploratory problems-based approach, *Proceedings of the First International Conference on Research in Engineering Education*, Honolulu, HI, 2007.
14. P. S. Steif, An articulation of the concepts and skills which underlie engineering statics, *Proceedings of the Frontiers in Education Conference,* Salt Lake City, UT, 2004.
15. P. S. Steif and J. A. Dantzler, A statics concept inventory: development and psychometric analysis, *Journal of Engineering Education*, **94**, 2005, p. 363.
16. P. S. Steif and A. Dollar, A new approach to teaching and learning statics, *Proceedings of the ASEE Annual Conference and Exposition*, Nashville, TN, 2003.
17. S. Krause, Assessing conceptual transfer of phase behavior from the domain of chemistry to the domain of materials engineering, *Proceedings of the First International Conference on Research in Engineering Education*, Honolulu, HI, 2007.
18. J. M. Case and D. M. Fraser, An investigation into chemical engineering students' understanding of the mole and the use

of concrete activities to promote conceptual change, *International Journal of Science Education*, **21**, 1999, pp. 1237–1249.
19. J. M. Case and D. M. Fraser, The Challenges of Promoting and Assessing for Conceptual Understanding in Chemical Engineering, *Chemical Engineering Education*, **36**, 2002, pp. 42–47.
20. D. Kotys-Schwartz, D. Reamon and L. Carlson, Systematic integration of concept inventories in mechanical engineering, *Proceedings of the ASEE Annual Conference and Exposition*, Chicago, IL, 2006.
21. D. L. Darmofal, D. H. Soderholm and D. R. Brodeur, Using concept maps and concept questions to enhance conceptual understanding, *Proceedings of the Frontiers in Education Conference*, San Diego, CA, 2002.
22. B. A. Bishop and C. W. Anderson, Student conceptions of natural selection and its role in evolution. *Journal of Research in Science Teaching*, **27**(5), 1990, pp. 415–427.
23. L. Deslauriers and C. Wieman, Learning and retention of quantum concepts with different teaching methods, *Physical Review Special Topics—Physics Education Research*, **7,** 2011, pp. 1–6.
24. T. Jaakkola, S. Nurmi and K. Veermans, A comparison of students' conceptual understanding of electric circuits in simulation only and simulation-laboratory contexts, *Journal of Research in Science Teaching*, **48**, 2011, pp. 71–93.
25. C. H. Kautz, P. R. L. Heron, P. S. Shaffer and L. C. McDermott, Student Understanding of the Ideal Gas Law, Part I: A macroscopic perspective, *American Journal of Physics*, **73**(11), 2005a, pp. 1055–1063.
26. C. H. Kautz, P. R. L. Heron, P. S. Shaffer and L. C. McDermott, Student understanding of the ideal gas law, Part II: A microscopic perspective, *American Journal of Physics*, **73**(11), 2005b, pp. 1064–1071.
27. G. Light, S. Swarat, E. J. Park, D. Drane, E. Tevaarwerk and T. Mason, Understanding undergraduate students' conceptions of a core nanoscience concept: Size and scale, *Proceedings of the First International Conference on Research in Engineering Education*, Honolulu, HI, 2007.
28. M. Limón, Conceptual change in history. In M. Limón and L. Mason (eds.), *Reconsidering Conceptual Change: Issues in Theory and Practice*, Dordrecth, The Netherlands, Kluwer Academic Publishers, 2002.
29. I. A. Halloun and D. Hestenes, Common-sense concepts about motion, *American Journal of Physics*, **53**(11), 1985a, pp. 1056–1065.
30. I. A. Halloun and D. Hestenes, The initial knowledge state of college physics students, *American Journal of Physics*, **53**(11), 1985b, pp. 1043–1048.
31. S. Vosniadou (ed.), *International handbook of research on conceptual change*, Second edition. New York, NY, Routledge, 2013.
32. K. A. Strike and G. J. Posner, A revisionist theory of conceptual change. in R. A. Duschl and R. J. Hamilton (eds.), *Philosophy of science, cognitive psychology, and educational theory and practice,* Albany, NY, State University of New York Press, 1992, pp. 147–176.
33. J. Ivarsson, J. Schoultz, J., and R. Säljö, Map reading versus mind reading: Revisiting children's understanding of the shape of the earth, In M. Limón and L. Mason (eds.), *Reconsidering conceptual change: Issues in theory and practice*, Dordrecth, The Netherlands, Kluwer Academic Publishers, 2002, pp. 77–99.
34. L. Mason, Introduction: Bridging the cognitive and sociocultural approaches in research on conceptual change: Is it feasible? *Educational Psychologist*, **42**(1), 2007, pp. 1–7.
35. R. Säljö, My brain's running slow today—the preference for 'things ontologies' in research and everyday discourse on human thinking, *Studies in Philosophy and Education*, **21**, 2002, pp. 389–405.
36. M. D. Svinicki, *A guidebook on conceptual frameworks for research in engineering education*, 2010.
37. J. Heaton, *Reworking Qualitative Data*, Thousand Oaks, CA, Sage, 2004.
38. N. L. Leech and A. J. Onwuegbuzie, Qualitative data analysis: A compendium of techniques and a framework for selection for school psychology research and beyond, *School Psychology Quarterly,* **23**(4), 2008, pp. 587–604.
39. D. B. Montfort, S. A. Brown and D. Pollock, An Investigation of Students' Conceptual Understanding in Related Sophomore to Graduate-Level Engineering and Mechanics Courses, *Journal of Engineering Education*, **98**(2), 2009, pp. 111–129.
40. D. B. Montfort, K. Beddoes and S. A. Brown, The development of new engineers' epistemologies, *Forum on Philosophy, Engineering and Technology*, Blacksburg, VT, 2014.
41. B. Andrews, S.A. Brown, D. Montfort and M. P. Dixon, M. P., Student Understanding of Sight Distance in Geometric Design, *Transportation Research Record: Journal of the Transportation Research Board*, 2199, 2010, pp. 1–8.
42. S. Davis, S. A. Brown, R. Borden, D. B. Montfort and M. Dixon, Embedded Knowledge in Transportation Engineering: Comparisons between Engineers and Instructors, *Journal of Professional Issues in Engineering Education and Practice*, **139**(1), 2013, pp. 51–58.
43. A. Easley, S. A. Brown, J. Adam, D. B. Montfort and B. VanWie, Open channel flow misconceptions and ontological categories, *ASEE/IEEE Frontiers in Education Annual Conference*, Seattle, WA, 2012.
44. G. Herman, M. Loui and C. Zilles, Students' misconceptions about medium-scale integrated circuits, *IEEE Transactions on Education*, **54**(4), 2011, pp. 637–645.
45. G. L. Herman, C. Zilles and M. C. Loui, How do students misunderstand number representations? *Computer Science Education*, **23**(3), 2011, pp. 289–312.
46. G. L. Herman, C. Zilles and M. C. Loui, Flip-flops in students' conceptions of state, *IEEE Transactions in Education*, **55**(1), 2012, pp. 88–98.
47. G. L. Herman, C. Zilles and M. C. Loui, A psychometric evaluation of the Digital Logic Concept Inventory, *Computer Science Education*, **24**(4), 2014, pp. 277–303.
48. Fluid Mechanics Concept Inventory, from http://cihub.org/resources/9, 2011.
49. H. P. Ginsburg, *Entering the Child's Mind: The Clinical Interview in Psychological Research and Practice*, New York, Cambridge University Press, 2007.
50. S. I. Greenspan, *The Clinical Interview of the Child* (Vol. 3rd), Washington D.C., American Psychiatric Publishing, Inc., 2003.
51. A. A. diSessa, An interactional analysis of clinical interviewing, *Cognition and Instruction*, **25**(4), 2007, pp. 523–565.
52. G. J. Posner and W. A. Gertzog, The clinical interview and the measurement of conceptual change, *Science Education*, **66**, 1982, pp. 195–209.
53. M. T. H. Chi, Quantifying qualitative analyses of verbal data: A practical guide. *Journal of the Learning Sciences*, **6**, 1997, pp. 271–315.
54. M. T. H. Chi, Laboratory methods for assessing experts' and novices' knowledge. *The Cambridge handbook of expertise and expert performance*, 2006, pp. 167–184.
55. S. Vosniadou and W. F. Brewer, Mental models of the Earth: A study of conceptual change in childhood, *Cognitive Psychology*, **24**, 1992, pp. 535–585.
56. P. R. Pintrich, Motivational beliefs as resources for and contraints on conceptual change, In W. Schnotz, S. Vosniadou and M. Carretero (Eds.), *New perspectives on conceptual change*, Netherlands, Pergamon, 1999, pp. 33–50.
57. G. M. Sinatra and P. R. Pintrich, The role of intentions in conceptual change learning, in G. M. Sinatra and P. R. Pintrich (Eds.), *Intentional conceptual change*, Mahwah, NJ, Lawrence Erlbaum Associates, 2003.
58. S. Vosniadou, Capturing and modeling the process of conceptual change, *Learning and Instruction*, **4**, 1994, 45–69.
59. M. T. H. Chi and R. Roscoe, The processes and challenges of conceptual change. In M. Limón and L. Mason (eds.), *Reconsidering conceptual change: Issues in theory and practice*, Dordrecth, The Netherlands, Kluwer Academic Publishers, 2002, pp. 3–27.
60. R. Säljö, Concepts, cognition and discourse: From mental structures to discursive tools, In W. Schnotz, S. Vosniadou and M. Carretero (Eds.), *New perspectives on conceptual change*, Netherlands, Pergamon, 1999, pp. 81–90.

61. D. B. Montfort, G. L. Herman, S.A. Brown, R.A. Streveler, and H. M. Matusovich, Novice-led paired thematic analysis: A methodological approach to conceptual change in engineering, *Proceedings: American Society for Engineering Education Annual Conference and Exhibition*, Atlanta, GA, 2013.
62. N. K. Denzin and Lincoln, Y. S. *Strategies of Qualitative Inquiry*, Thousand Oaks, CA, Sage Publications, 2003.
63. M. Q. Patton, *Qualitative Research and Evaluation Methods* (3rd ed.), Thousand Oaks, CA, Sage Publications, 2002.
64. B. Glaser, The constant comparative method of qualitative analysis, *Social Problems*. **12**(4), 1965, pp. 436–445.
65. V. Braun and V. Clarke, Using thematic analysis in psychology, *Qualitative Research in Psychology,* **3**, 2006, pp. 77–101.
66. M. T. H. Chi, Commonsense Conceptions of Emergent Processes: Why Some Misconceptions Are Robust. *Journal of the Learning Sciences*, **14**, 2005, pp. 161–199.
67. M. T. H. Chi, P. J. Feltovich and R. Glaser, Categorization and representation of physics problems by experts and novices, *Cognitive Science*, **5**, 1981, pp, 121–152.
68. M. T. H. Chi., R. Roscoe, J. D. Slotta, M. Roy and C. C. Chase, Misconceived causal explanations for emergent processes, *Cognitive Science*, **36**(1), 2012, pp. 1–61.
69. J. D. Slotta and M. T. H. Chi, Helping students understand challenging topics in science through ontology training, *Cognition and Instruction*, **24**(2), 2006, pp. 261–289.

Devlin Montfort is an Assistant Professor in the School of Chemical, Biological, and Environmental Engineering. He researches conceptual and epistemological changes in engineers, students, and faculty. He holds B.S., M.S. and Ph.D. degrees in Civil Engineering from Washington State University. He teaches undergraduate engineering courses and graduate-level engineering education courses.

Geoffrey L. Herman is a visiting assistant professor with the Illinois Foundry for Innovation in Engineering Education at the University of Illinois at Urbana-Champaign and a research assistant professor with the Department of Curriculum & Instruction. His research interests include creating systems for sustainable improvement in engineering education, measuring conceptual change and development in engineering students, and change in faculty beliefs about teaching and learning. He earned his Ph.D. in Electrical and Computer Engineering from the University of Illinois at Urbana-Champaign as a Mavis Future Faculty Fellow.

Shane Brown is an associate professor in the School of Civil and Construction Engineering at Oregon State University. His research interests include studies of engineering practice within theories of situated cognition and studies of students and engineers understanding of engineering concepts and conceptual change. He is a recipient of the NSF CAREER Award and numerous teaching, research, and service awards. Dr. Brown earned his B.S. and Ph.D. in Civil Engineering from Oregon State University.

Holly M. Matusovich is an Assistant Professor in the Department of Engineering Education at Virginia Tech. She holds a B.S. in Chemical Engineering from Cornell University, an M.S. in Materials Science from the University of Connecticut, and a Ph.D. in Engineering Education from Purdue University. Dr. Matusovich came to academia after nearly 12 years in engineering practice. She currently teaches in the first year engineering program and also in the engineering education graduate program. Her research focuses on student and faculty motivation and student identity development in the context of engineering classrooms and careers. Dr. Matusovich is a PI or Co-PI on several NSF-funded research studies including a CAREER grant focusing on the intersections of motivation, learning strategies, and conceptual understanding.

Ruth A. Streveler is an Associate Professor and Chair of the Graduate Program in the School of Engineering Education at Purdue University. Before coming to Purdue in 2006 she was the founding Director of the Center for Engineering Education at the Colorado School of Mines. She has been conducting research on conceptual change in engineering science for the past 15 years and has been the PI or co-PI for various projects on the subject that have been funded by the National Science Foundation. She is an Associate Editor for the Journal of Engineering Education and named as a Fellow of the American Society for Engineering Education in 2015.

Olusola Adesope is an Associate Professor of Educational Psychology in the Department of Educational Leadership, Sport Studied, Educational/ Counseling Psychology, College of Education at Washington State University-Pullman. His research is positioned at the intersection of educational psychology, learning sciences, and instructional design and technology. Dr. Adesope's current research focuses on the use of systematic reviews and meta-analyses for evidence-based practices, cognitive and pedagogical underpinnings of learning with computer-based multimedia resources, and investigation of instructional principles and assessments in STEM education.